Document Title	**Detailed Specification for Frames for the InterLAC system**
Description	This document describes the technical requirements of rail frames for accelerator components in the beamline sections of the InterLAC system
Division/ Organization	MIN
Field of Application	GSI GmbH

Document History

Version	Prepared/Checked by	Date	Date of Release	Comments
V.0.1	C. Englert, 29.10.2026			
V.0.2	C. Englert, 18.11.2026			

Abstract

This document describes the technical requirements of rail frames (PSP: G8.3.3.4.4.90.1) for accelerator components in the beamline sections of the InterLAC system

Table of Contents

1. Purpose and classification of the document 5
2. Abbreviations, terms and Definitions 5
3. Scope of the Technical System 6
   - 3.1. System Overview 6
   - 3.2. Scope of Delivery 8
   - 3.2.1. Content of Delivery 8
   - 3.2.2. Exclusion from Scope of Delivery 9
   - 3.2.3. Provisions by the Company 9
4. System Specification 10
   - 4.1. Technical description 10
   - 4.1.1. Rail frames 10
   - 4.2. Further Requirements 12
   - 4.2.1. Delivery Date 12
   - 4.2.2. Interfaces 12
   - 4.2.3. Assembly 12
   - 4.2.4. Labelling 12
5. Procedure 13
   - 5.1. Design Phase 13
   - 5.1.1. Conceptual Design Review (CDR) 13
   - 5.1.2. Final Design Review (FDR) 14
   - 5.2. Production Phase 14
6. Quality Assurance, Tests, and Acceptance 14
   - 6.1. Factory Acceptance Test (FAT) 14
   - 6.2. Site Acceptance Test (SAT) 15
7. Transport 15
8. Documentation 15
9. Related Documents 16

List of Tables:

Table 1 Abbreviations 5
Table 2 Definitions 5
Table 3: Content of delivery 8

List of Figures:

Figure 1: Overview, three rail frames + components....6
Figure 2: Three rail frames, top view....6
Figure 3: Three rail frames, view from below....7
Figure 4: Rail frames with component supports....7
Figure 5: Pressure bolts....11
Figure 6: Rail frame 1 with the highest loads....11

1. Purpose and classification of the document

The InterLAC is part of the UNILAC restoration project and comprises an ion source and a beamline that will produce a beam as an interim solution for GSI and FAIR.

This document describes the requirements on rail frames in the beamline sections of the InterLAC. These rail frames carry component supports for accelerator components.

Chapter 3 informs about the scope of the technical system.

Chapter 4 informs about the tectonic requirements of the area, which have to be considered when designing the rail frames and describes the rail frames themselves and their specialties.

Chapter 5 describes the procedure for design and production.

Chapter 6 informs about quality assurance items.

No legal or contractual conditions are treated in this document. All related information is given in the corresponding contract.

2. Abbreviations, terms and Definitions

Table 1 Abbreviations

CDR	Conceptual Design Review
CID	Component Identifier
FAT	Factory Acceptance Test
FDR	Final Design Review
GSI	Helmholtzzentrum für Schwerionenforschung GmbH, Darmstadt, Germany
IOL	Ion Optical Layout
SAT	Site Acceptance Test
TG	Technical Guideline
TRI	Transport and Installation

Table 2 Definitions

Company	GSI
Contractor	provider, producer

3. Scope of the Technical System

3.1. System Overview

Welded steel frame constructions – here and after referred to as “rail frames” – are needed to carry supports for accelerator components including their necessary media supply units. They will be placed in the InterLAC system (see Figure 1, Figure 2 and Figure 3).

The rail frames bridge a pit and the supports for the components are placed onto them (see Figure 4). Railings on two rail frames (see Figure 1) are needed to protect from danger of falling into the pit.

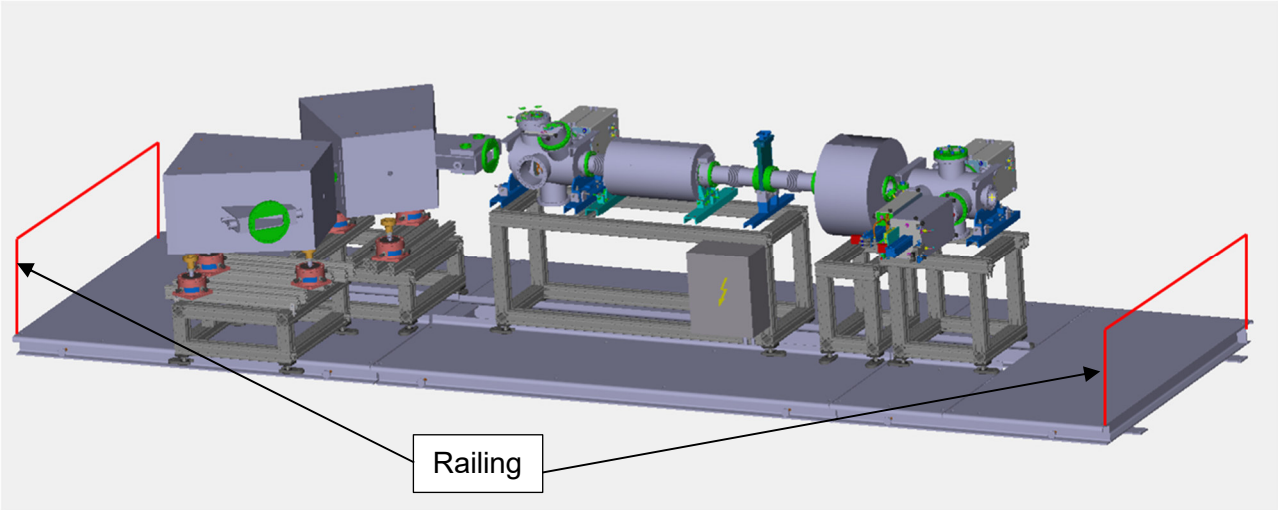

Figure 1: Overview, three rail frames + components

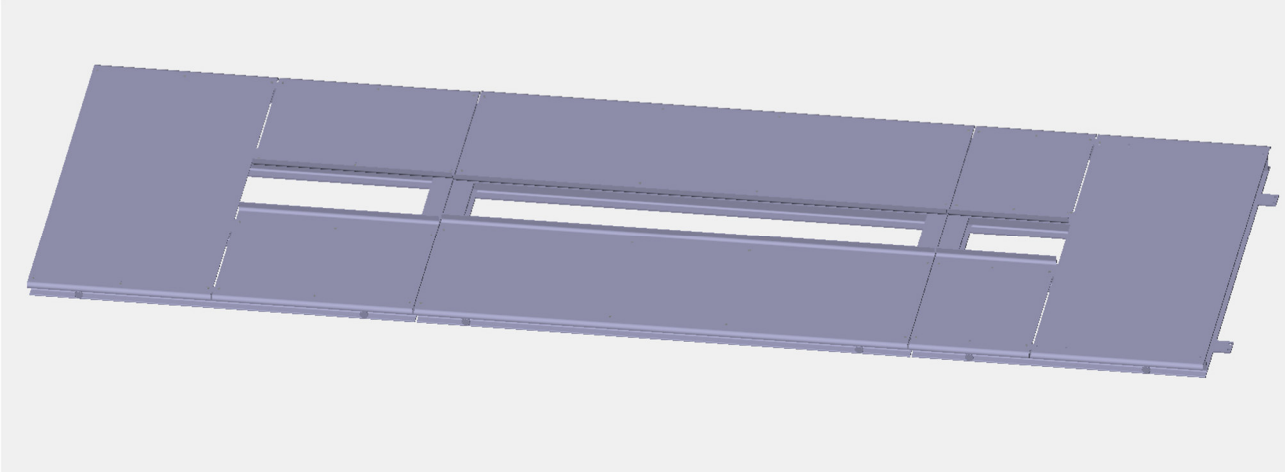

Figure 2: Three rail frames, top view

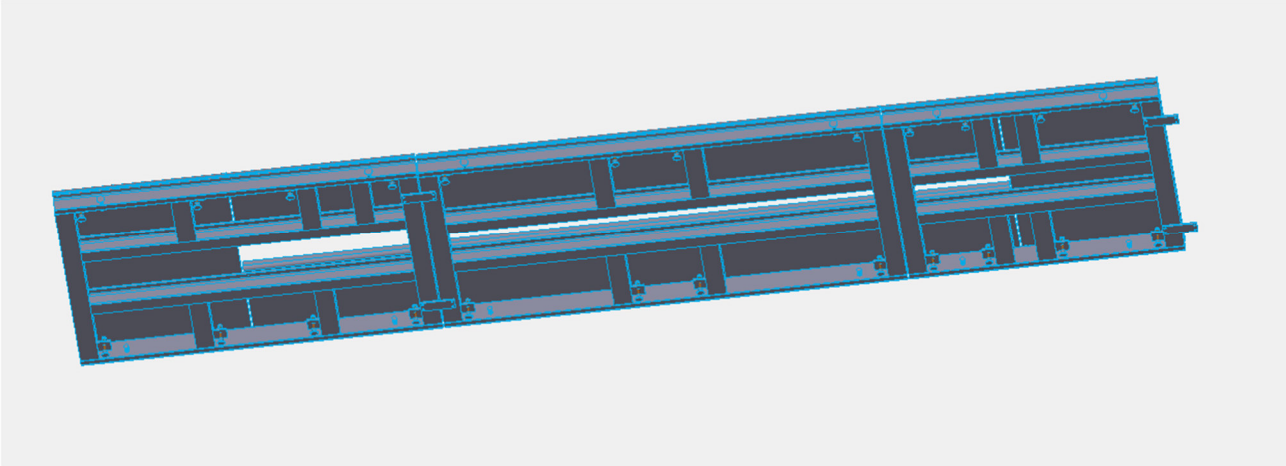

Figure 3: Three rail frames, view from below

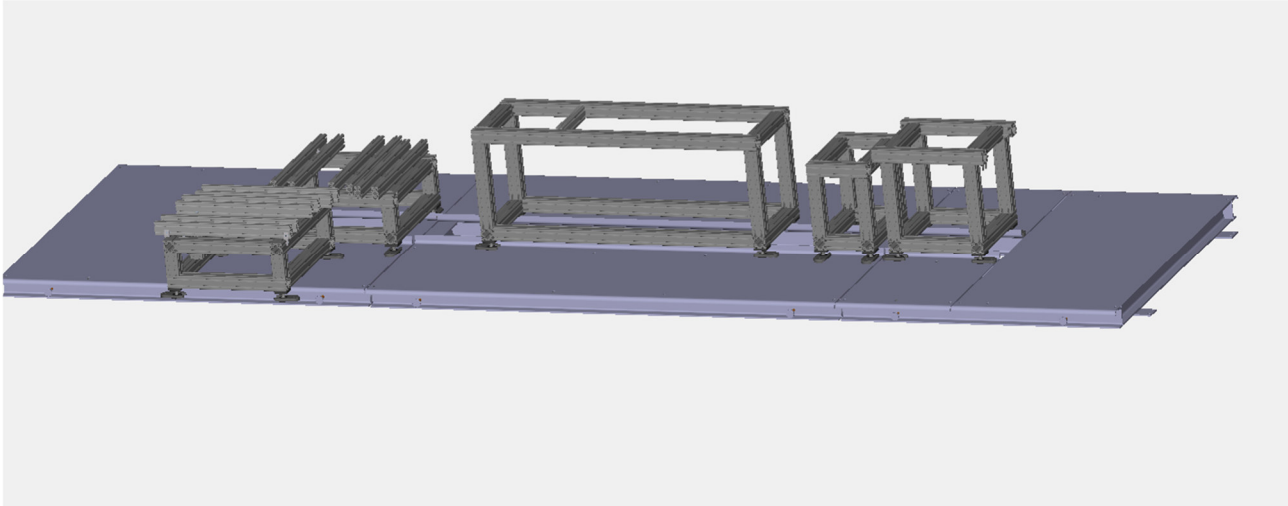

Figure 4: Rail frames with component supports

A detailed draft model of the InterLAC system is attached, see [11].

3.2. Scope of Delivery

3.2.1. Content of Delivery

The scope includes 12 rail frames.

Table 3: Content of delivery

Name	Length [mm]	Width [mm]	Height [mm]	Amount	Additional load [kg]
Rail frame 1	1200	2010	120	1	4000
Rail frame 2	2956,5	2010	120	1	1500
Rail frame 3	1761,5	2010	120	1	500
Rail frame 4	Ca. 3000	2010	120	1	tbd
Rail frame 5	Ca. 1400	2010	120	1	tbd
Rail frame 6	Ca. 1400	2010	120	1	1600
Rail frame 7	Ca. 1500	2010	120	1	tbd
Rail frame 8	Ca. 2000	2010	120	1	2000
Rail frame 9	Ca. 1800	2010	120	1	tbd
Rail frame 10	Ca. 1800	2010	120	1	tbd
Rail frame 11	Ca. 1800	2010	120	1	tbd
Rail frame 12	Ca. 1800	2010	120	1	tbd

The final number of rail frames is not fixed yet. Therefore, an optional offer for up to three frames in each length 1400 mm, 1800 mm and 2000 mm are required. Their delivery date will be defined later. The option will latest be ordered by end of July 2027.

The content of delivery is stated in the following:

Rail frames

- check of interfaces to pit and component supports
- design and calculation of rail frames in different lengths (incl. CDR, FDR)
- construction of railings for rail frame 1 and 3
- handling instruction / data sheet
- assembly strategy
- production of rail frames
- quality assurance incl. documentation
- FAT, delivery and SAT

3.2.2. Exclusion from Scope of Delivery

Spare parts, grounding bolts and all parts which are necessary to fix the supports to the rail frames are not part of the scope of delivery.

3.2.3. Provisions by the Company

The Company will deliver the necessary information about the components (3D models, drawings) that will be positioned on the supports as well as the building plans.

4. System Specification

The area around Darmstadt is set out as earthquake zone one. Possible influences on the design of the rail frames and the supports have to be checked and if necessary to be considered. The calculations have to follow DIN EN 1998-1 and DIN EN 1090-1 in connection with DIN EN 1090-2. They have to be done in reference to Eurocodes.

Production has to be done by a supplier, which has been certificated according to DIN EN 1090.

The design basis for earthquake resistance has to follow technical guideline F-TG-ZT3.86 (see [9]).

The testable structural analyses of the frames have to be done according to the regulation of the State Hesse.

4.1. Technical description

The width of all rail frames is 2010 mm, but their length and the additional loads differ. Therefore, they have to be designed individually.

It must be possible to transport all rail frames by forklift and crane. The lifting points have to be specified in the handling instruction / data sheet of every assembly.

The expected additional loads on the rail frames are stated in Table 3. The loads that are not defined yet, will be definitely lower than the loads on rail frame 1, which is the frame with the highest load. They will be defined latest at the kick-off meeting.

4.1.1. Rail frames

The scope of delivery includes the dimensioning, the design and the production of the rail frames (see Figure 2 and Figure 3).

At the left hand side of the first segment a handrail must be installed as well as on the right hand side of segment 3, see Figure 1. The railing must be designed following the current rules of work safety (Technische Regeln für Arbeitsstätten – ASR, see [13]). If a slotted railing is used, a pin or such is mandatory to secure it against displacement.

The rail frames stand on pressure bolts, which are placed on steel rails embedded in concrete. Via pressure bolts, the rail frames can be levelled out in height and width (see Figure 5).

Drawings of an original rail frame are attached (see [12]). They can be used as a draft, but it has to be considered that the current loads differ from the original loads. A calculation and proof of the mechanical stability is mandatory. The drawings define the available installation space.

The rail frame stays open in the middle because here the media supply is passed through from the pit below to the components above.

The side areas are covered with ribbed sheet metal, which has to be accessible. They shall be screwed to the frame, not welded. It is not required to design one sheet metal in the length of each rail frame, but they can be splitted in shorter plates.

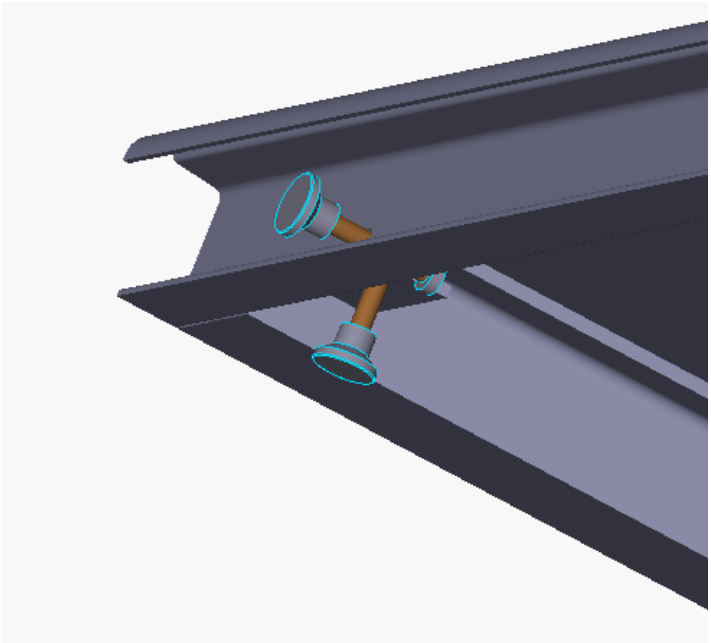

Figure 5: Pressure bolts

The rail frame segment with the highest loads carries about 4 t, see Figure 6.

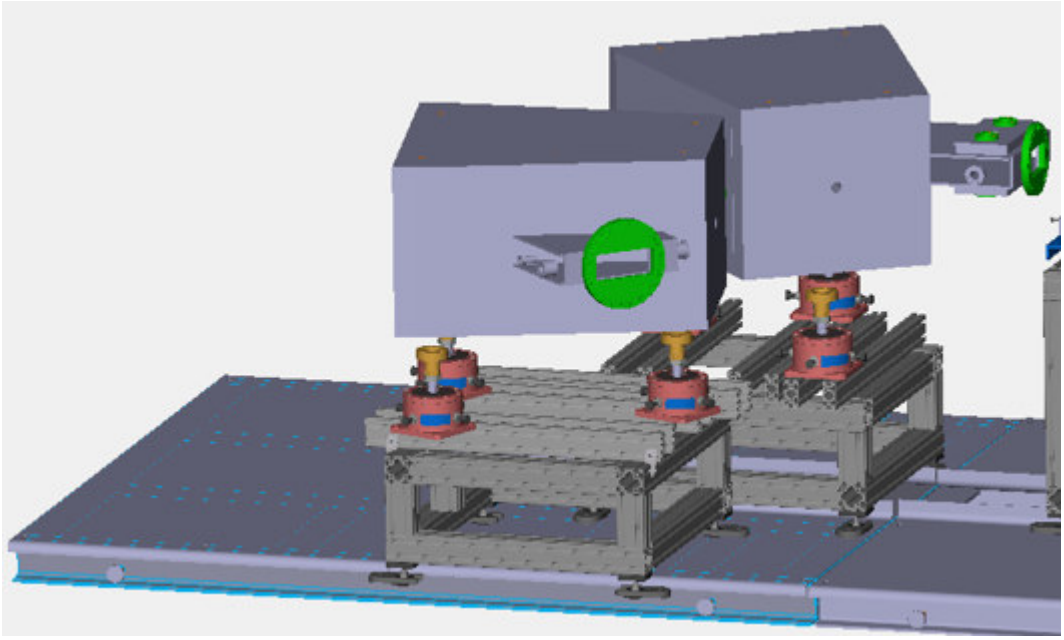

Figure 6: Rail frame 1 with the highest loads

As material S235JR or similar shall be used.

As surface treatment, powder coating in RAL 5010 with a layer of 80 - 100 µm shall be used.

The ribbed sheet metal shall be galvanized.

4.2. Further Requirements

The General Specification (see [1]) contains all common rules and definitions valid for GSI. Requirements on this project that are not generally valid are stated in this document.

4.2.1. Tolerances

For all dimensions, the general tolerances according to DIN ISO 2768-mK and for all welding tolerances EN ISO 13920-BF are valid.

Any deviation from the tolerances has to be immediately communicated to the Company in written form, so they can be checked. The Company needs to agree with any deviations from the tolerances in written form to state its acceptance. The Contractor has to provide a measurement concept to verify the given tolerances.

4.2.2. Delivery Date

The rail frames 1, 2 and 3 have to be delivered as fast as possible, latest by end of June 2027. The remaining rail frames 4 – 12 have to be delivered by the end of September 2027. The dates can be fixed during the kick-off meeting.

4.2.3. Interfaces

Models and drawings of all interfaces of the building / component supports to the rail frames and to the stairs will be transmitted by the Company.

4.2.4. Assembly

Before delivery, the rail frames have to be assembled by the Contractor. No loose parts shall be delivered. The installation on site will be done by TRI (Company).

4.2.5. Labelling

Every rail frame has to be marked with a permanent attached aluminum label. These labels contain the following information:

- unique CID number
- final drawing number of the rail frame provided by the Contractor
- manufacturer
- manufacturing date
- weight of the rail frames
- permitted additional load

If loose parts cannot be avoided, they have to be permanently marked with their drawing number. The CID numbers will be generated and provided by the Company latest at the beginning of production. The details of labelling procedures can be found in the Technical Guideline F-TG-B-05e (see [10]).

5. Procedure

5.1. Design Phase

The design phase consists of two review milestones: Conceptual Design Review (CDR) and Final Design Review (FDR). Directly after the kick-off meeting a test for the data exchange between Company and Contractor is advantageous.

CDR shall include all 3D models in order to understand the whole concept. FDR shall include 3D models and 2D drawings. The work started before the approval of drawings by Company will be refused.

All 3D models have to contain a skeleton, which represents the Ion optical layout (IOL). The information will be transferred with the models of the components. The skeleton has to be implemented into the models in reference to technical guideline TG3.75 (see [8]).

The development of the rail frames will be divided into two steps:

1. conceptual design of rail frames
2. final design of rail frames according to step 1

After the Conceptual Design Review of the 3D models, the manufacturing drawings will be made. The approval of these drawings will be done in the Final Design Review (FDR).

The design has to follow the Design Guideline (see [2]) and the Data Exchange Guideline (see [3], [4]).

5.1.1. Conceptual Design Review (CDR)

The Conceptual Design Review (CDR) contains:

- the proof of the technical solution, mechanical stability calculations, and – if required – assembly strategy
- a worst-case analysis for the mechanical-stability calculation is permissible, if it covers all other cases
- the check of the models for the rail frames regarding interfaces to the building / component supports
- the check of the model regarding data integrity

The following documentation has to be provided two weeks before the CDR by the Contractor:

- 3D CAD models of the rail frames according to the Data Exchange Guideline
- welding plans and welding sequences
- documentation of the assembly strategy
- draft of handling instruction / data sheet
- documentation of safety relevant considerations and risk analysis
- information about the necessary involvement of independent assessors, e.g. TÜV
- production plan
- quality assurance plan
- draft of documentation

5.1.2. Final Design Review (FDR)

The Final Design Review (FDR) contains:

- check and approval of production-ready drawings
- check of assembly strategy and approval
- check of planned documentation

The following documentation has to be provided two weeks before FDR by the Contractor:

- 3D CAD model of the rail frames (positioned with the skeleton)
- complete, production-ready set of drawings of the rail frames
- documentation of safety-relevant dimensioning / mechanical-stability calculations
- welding plan
- documentation of assembly strategy
- handling instruction / data sheet
- documentation – if necessary – by TÜV
- information for quality assurance
- documentation

5.2. Production Phase

Intended milestones for the production phases are given in the contract.

During production phase a monthly report (see [5]) has to be presented which includes information about completed tasks, ongoing tasks and planned tasks for the next month. In addition, the progress report has to be filled in every month and transferred to the Company (see [6]).

6. Quality Assurance, Tests, and Acceptance

The quality assurance will be divided into the Factory Acceptance Test (FAT) and the Site Acceptance Test (SAT).

6.1. Factory Acceptance Test (FAT)

The FAT contains the visual inspection and proof of assembly of the rail frames at the Contractor's site:

- proof of assembly of rail frames and railings
- check of geometric and drawing conform execution
- check of welding seams, execution welding seams
- check of protection against corrosion / surface coating
- measurement of interfaces to the building and for component supports
- check of measurement reports
- check of function of rail frames

6.2. Site Acceptance Test (SAT)

The SAT contains the visual inspection of the components after transportation and the following items during installation:

- geometric and drawing conform execution
- check of welding seams
- protection against corrosion
- proof of function
- check of measurement reports
- check of stiffness of the frames placed in the building
- documentation

7. Transport

The transportation of the rail frames will be done by truck. The restrictions of the public haulage road have to be considered. The choice of transportation possibilities has to be done in close agreement with the Company.

The transport goes directly to the Company. Transshipment is prohibited.

For further information, see [7].

To guarantee a safe transport within the building, it is important to specify the weight of each rail frame, its center of gravity and possible lifting points. This information shall be given in the handling instruction.

8. Documentation

The documentation has to contain the following items:

- structural analyses calculation and proof
- design (3D models, production ready drawing set)
- assembly strategy
- handling instruction for frames and railings
- data sheet
- spare part list (if necessary)
- documentation for TÜV (if necessary)
- risk analysis, declaration of conformity
- inspection document according to DIN EN 10204
- measurement reports
- declaration about adherence of tightening torques (if necessary)
- material certificated 3.1 for all material (excluding purchase parts e.g. fasteners)
- reports quality assurance
- certificate according to DIN EN 1090-2, min. EXC2
- all necessary passports for approved welders and welding certificates
- manufacturer certificate for welding filler
- certificate about execution of corrosion protection / surface coating

9. Related Documents

[1] General Specification, F-GS-F-01e-General_Specification: ID-EDMS – 1365092v.5

[2] Technical Guideline F-TG-MDS-en-KRL 180404 “Design Guideline“: ID-EDMS – 1229367v.6

[3] Technical Guideline T-TG-B-02e-DARL_T1 20151126 “Data Exchange Guideline – Part 1” : ID-EDMS – 1229366 v.7

[4] Technical Guideline T-TG-B-03e-DARL_T2 20151126 “Data Exchange Guideline – Part 2” : ID-EDMS – 1259954 v.6

[5] Template Monthly report: ID-EDMS – 1409521 v.1

[6] Progress report / Dashboard

[7] Technical Guideline, F-TG-T-01e “Transport”: ID-EDMS – 1172866 v.8

[8] FAIR Technical Guideline, F-TG-ZT-3.75e ”Component Reference”: ID-EDMS – 1467107 v.6

[9] Technical Guideline, F-TG-ZT-3.86 “Design basis for earthquake resistance”: ID-EDMS – 1752525 v.2

[10] Technical Guideline, F-TG-B-05e “Component ID and Barcode System”: ID-EDMS – 1229368 v.5

[11] step file – draft model of rail frames and component support

[12] Drawing set of the original rail frame, U-IR560

[13] ASR’s - Technische Regeln für Arbeitsstätten