Table of Contents

1. ENGINEERING STANDARDS AND DESIGN PRINCIPLES 2

1.1 Standards 2

1.1.1 Legal Standards 2

1.1.2 Technical Standards 3

1.2 Safety 5

1.3 Control Design Philosophy 6

1.4 Design Principles 6

1.5 Failsafe Principle 7

1.5.1 General 7

1.5.2 Fast Power Shut Down 7

1.6 Quality Assurance 7

1.7 Documentation 8

2. ENVIRONMENTAL ELECTRICAL CONDITIONS 8

2.1 General 8

2.2 The 20kV AC Supply System 9

2.2.1 Characteristics of the common electrical 20kV supply systems C1 and C3 10

2.2.2 Characteristics of the common electrical 20kV supply system C2 10

2.2.3 Characteristics of the pulsed power electrical 20kV supply system PP1/PP2 11

2.2.4 Characteristics of the pulsed power electrical 20kV supply systems PP1 and PP2 12

2.3 Characteristics of the 400V AC supply system (common/pulsed) 13

2.4. Connecting loads to electrical power 14

2.5 Locations of Electrical Loads 15

2.6 400 V AC Clean Power System 15

2.7 UPS-System 15

2.8 Five-Class EMC-Concept for Cables 16

2.9 Additional Equipotential Bonding System 16

3. INTERACTIONS OF ELECTRICAL LOADS WITH THE ENVIRONMENT 17

3.1 Electrical Power 17

3.1.1 Interactions of electrical loads with the common electrical supply systems C1, C2, C3 17

3.1.2 Interactions of electrical loads with the pulsed electrical supply system PP1/PP2 19

3.2 Power Dissipation 19

3.2.1 Power Dissipation (Air Cooling) 19

3.2.2 Power Dissipation (Water Cooling) 20

© GSI Helmholtzzentrum für Schwerionenforschung GmbH
Planckstraße 1, 64291 Darmstadt

EDMS **1172862 v.5** status **Released** access **Restricted**
F-TG-ET-01e_Electrical_Design_Rules_and_Regulations_v3.0.pdf modified **2013-10-25 09:00**

1. Engineering Standards and Design Principles

1.1 Standards

Electrical equipment and electrical systems have to be designed and built according to

- the technical specifications
- the state of the art in electrical engineering.

taking into account the following standards:

1.1.1 Legal Standards

- German legal standards,
  such as
  - actual statutory industrial safety regulations
  - by legal act implemented accident prevention regulations, in particular regulations for electrical installations and equipment (BGV A3, i.d. Berufsgenossenschaftliche Vorschrift für Sicherheit und Gesundheit bei der Arbeit, Elektrische Anlagen und Betriebsmittel)
  - general safety-related and industrial health rules
  - “Niederspannungsrichtlinie 2006/95/EU” (Low-Voltage Directive 2006/95/EC)
  - ”Gesetz über die elektromagnetische Verträglichkeit von Betriebsmitteln“ (EMVG), basing on the Electromagnetic Compatibility (EMC) Directive 2004/108/EC

© GSI Helmholtzzentrum für Schwerionenforschung GmbH
Planckstraße 1, 64291 Darmstadt

1.1.2 Technical Standards

- VDE standards (German Association for Electrical, Electronic & Information Technologies), in particular
  - DIN VDE 0100-100 (according IEC 60364-1:2005 modified) Errichten von Starkstromanlagen (Low Voltage electrical installations), and referenced standards
  - DIN VDE 0101 Starkstromanlagen mit Nennwechselspannungen über 1 kV (Power installations exceeding AC 1 kV)
  - VDE 0532-76-1 resp. EN 60076-1 (parts concerning transformers and inductors) and referenced standards
  - If a supplier wants to refer to other standards as VDE standards (such as IEC), they must be provided in full detail

- IEC and European standards, in particular
  - EN 60204-1 Safety of Machinery; Electrical Equipment of Machines; Pt. 1: General requirements
  - EN 60439-1 Low Voltage Switchgear and Control gear Assemblies Pt. 1: Type –tested and partially type-tested assemblies
  - EN 60529 Degree of protection provided by enclosures (IP-Code).
  - EN 50160 Voltage characteristics of electricity supplied by public distribution systems
  - IEC 61000-2-4 Electromagnetic compatibility (EMC), Environment – Compatibility levels in industrial plants for low-frequency conducted disturbances
  - IEC 60478-3 Stabilized Power Supplies DC Output: Conducted electromagnetic interference
  - EN 55011 Class A / Group 1- Industrial, scientific and medical radio frequency equipment. Electromagnetic disturbance characteristics. Limits and methods of measurement
  - EN 55022 Annex C / - Information technology equipment.

© GSI Helmholtzzentrum für Schwerionenforschung GmbH
Planckstraße 1, 64291 Darmstadt

Radio disturbance characteristics. Limits and methods of measurement

- IEC 61204-3 Low voltage power supplies. Electromagnetic compatibility (emission)
- IEC 61000-4 Level 4 Electromagnetic compatibility (immunity)

- Special FAIR GmbH standards as given in the specifications of concern

- Top-hat rail mounted devices in switch cabinets are preferred.

- For programmable logic controllers (PLC), Siemens types of the series S7-300 and S7-400 have to be used. Exceptions need a written approval by FAIR GmbH.

- For cable marking, stick to the nomenclature system given by FAIR GmbH.

- For all devices and drawers within 19" racks connectors according to IEC-60320-C13 (German: *Kaltgerätestecker*) or/and standard 230V CEE7/4 (DIN49440/441) has / have to be used for 230V/50Hz AC1.

- For measurement purposes BNC, N, Tuchel and LEMO Connectors are preferred.

- The standard German 5 pin, 3 phases 400V CEE-connectors[1] (according to DIN IEC 60309) are mandatory for the 400V-Mains AC3.

- For power cables, the standard German 4 colour-coding system for wires has to be used (e.g. PE green/yellow). For control cables, numerated wires also may be used (with or without PE, as applicable).

© GSI Helmholtzzentrum für Schwerionenforschung GmbH
Planckstraße 1, 64291 Darmstadt

1.2 Safety

It is requested that:

- All polymer materials and cable insulators must be halogen and sulphur-free with low smoke density, toxicity and corrosiveness in case of fire (Flame Retardant Non Corrosive cable type) for all stationary installed power cables as well as long distance power cables. Exceptions for internal cabling and special cables have to be clarified with FAIR GmbH.
- For all electrical loads, no materials containing halogens shall be used in any part (refer also to detailed specifications). The contributor must indicate any material that might not be halogen free. FAIR GmbH reserves the right to give written approval or refusal.
- For all switch cabinets for field installation, doors of cabinets (except door to control panel) shall be interlocked. These interlocks can be bypassed manually during tests (not necessary if cabinets will be installed in “Enclosed Electrical Areas”, AEB).
- All active parts behind the door of the control panel at a voltage greater than $50V_{DC}$ must be protected against accidental touch (at least ”finger save”, comparable with IP 20).
- Any energy stored in capacitors shall be discharged to a voltage less than 50V in less than 60 seconds after Fast-Shutdown or actuating the door-switch.
- The metallic frames, doors and magnetic circuits must be earthed.
- Cabinets with doors and distributed systems must have a fast shut down button (closed-circuit principle) which turns off directly the electrical supply of the unit or the system.
- The components and cables within the switch cabinets must be clearly identified (see also topic 1.3).
- Components to be mounted close to the beam lines must be able to stand radiation.

© GSI Helmholtzzentrum für Schwerionenforschung GmbH
Planckstraße 1, 64291 Darmstadt

1.3 Control Design Philosophy

For details, refer to the Technical Guidelines of the Control System. In general:

- Integrate control functions to permit remote control and supervision from centralized control stations as practical.
- Provide local control stations/hardware which permit local status indications and/or operation of equipment where necessary.
- Set a common standard and comply with the detailed specifications respectively for hardware and software systems as well as for operators' interface.
- All equipment to be mounted on site (at the beam lines), terminal boxes and cables must be clearly labelled in correspondence with the circuit diagrams.

1.4 Design Principles

- All technical concepts and designs have to be given in form of a design report to FAIR GmbH and must be approved by the responsible coordinating group of FAIR GmbH before start of construction. FAIR GmbH shall coordinate the process of connecting electrical equipment or systems to the electrical supply system of FAIR GmbH.
- Firmware and parameters have to be stored in flash memory (avoid buffer batteries; PLC programs to be stored in flash memory cards).
- Low voltage connections have to be equipped with galvanic insulation from high and mains voltage.
- Stick to the rules of RoHS "**R**estriction **o**f (the use of certain) **H**azardous **S**ubstances" (EU-Directive 2002/95/EC) when manufacturing the equipment.

© GSI Helmholtzzentrum für Schwerionenforschung GmbH
Planckstraße 1, 64291 Darmstadt

1.5 Failsafe Principle

1.5.1 General

In the event an equipment failure or external influence such as improper operation, high temperature, power failure or other adverse conditions affecting the proper function of a system or element involved with the safety of life or health, the system or element shall automatically revert to a state known to be safe to all personnel interfacing with the equipment.
When the fault is fixed, the equipment must stay in the safe state until it gets remote operation commands by means of the control system interface.
All interlock signals have to be designed as fail-safe circuit (closed circuit connection; “normally open contacts” with open collector or relay outputs).

1.5.2 Fast Power Shut Down

(See also 1.2) The fast power shut down is not allowed to be activated by automatic actions of safety systems (except Emergency Off). It is to be designed for manual intervention only.
If activated the shutdown system forces sensitive loads and converters to start their own shutdown procedure before it switches off predetermined circuit breakers of the 20 kV System thus turning off the complete power supply of the accelerators and experiments in dedicated areas. Only lights, safety systems and other pre-selected systems will stay in operation.

1.6 Quality Assurance

- The principles stated in the General Specifications have to be considered.
- Furthermore, this process includes also individual sub-assembly inspection and test procedures accompanied by written records at each stage, and must be designed to allow basic faults to be rapidly located, identified and their causes eliminated by the contributor.
- All equipment shall be manufactured in accordance with the best existing techniques and accepted good engineering practices available at the

© GSI Helmholtzzentrum für Schwerionenforschung GmbH
Planckstraße 1, 64291 Darmstadt

time of construction. All systems shall be designed and constructed for a facility with an expected operational lifetime longer than 20 years. The equipment shall be designed and constructed for continuous use i. e. 24 h 7 days a week over a period of several months.

- Any modifications to the material resulting from a systematic manufacturing fault must be carried out on all units. This must be done at the contributor's expense. This term is valid for 3 years after the acceptance test.

1.7 Documentation

All the circuit diagrams and schematics have to be given in EPLAN Electric P8 format and dxf-file format (except for the printed circuit boards which have to be delivered in dxf-file format and in pdf format).

2. Environmental Electrical Conditions

2.1 General

Indoor equipment must stand the following conditions during operation:

- Temperature and Relative Humidity:
  - Beam Tunnels: 15 - 35 °C, 30 - 70 % RH
  - Power Converter Rooms: 5 - 35 °C, 5% to max. 80 % RH non-condensing outside housings and switch cabinets
  - Beam Diagnostic Rooms: 18- 28°C, 30 - 70 % RH
  - Other Electric Rooms: 18- 28°C, 30 - 70 % RH

© GSI Helmholtzzentrum für Schwerionenforschung GmbH
Planckstraße 1, 64291 Darmstadt

- Storage conditions: 0-50°C, max. 80 % RH non-condensing
- Enclosures for equipment to be field mounted: min. IP 20 within buildings, IP 54 outdoor.

2.2 The 20kV AC Supply System

The FAIR facility has two main 20kV AC supply systems (Fig.1):

- The common supply system with three in normal operation independent 20kV three phase feeding lines C1, C2, C3.
- The pulsed power supply system with two in normal operation paralleled 20kV three phase feeding lines PP1 and PP2.

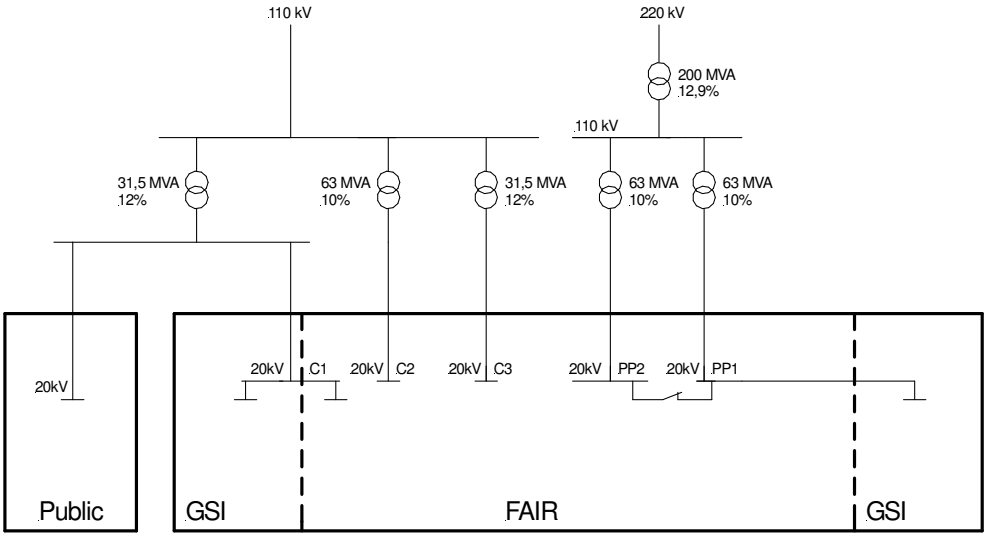

Fig. 1 20kV AC supply system with feeding lines and feeding transformers

The 20kV feeding lines C1, C2, C3 are connected via 110kV/20kV transformers to the public 110kV-grid. While the feeding transformers of C2 and C3 are exclusively reserved for FAIR the feeding transformer of C1 also feeds GSI and a local public 20kV-grid.

© GSI Helmholtzzentrum für Schwerionenforschung GmbH
Planckstraße 1, 64291 Darmstadt

The feeding lines PP1 and PP2 are exclusively reserved for FAIR GmbH and GSI. They are connected via two 110kV/20kV transformers and a common 220kV/110kV transformer to the public 220kV-grid. This feeding system is exclusively reserved for FAIR GmbH and GSI.

2.2.1 Characteristics of the common electrical 20kV supply systems C1 and C3

The characteristics are according to European Standard EN 50160. Equipment has to comply with:

- frequency: 50 Hz ± 1.0 %
  voltage: 20 kV ± 10 %
- phase imbalance : < 2.0 %
- total harmonic content : < 8 %
  2. harmonic : < 2.0 %
  3. harmonic : < 5.0 %
  ν -th harmonic : < $(1+\frac{25}{\nu})$ % for $5 \leq \nu < 17$
  : < 2 % for $\nu = 17$
  : < 1.5 % for $\nu = 19, 23, 25$
  with $\nu = 6\,K \pm 1$ and $k = 1,2,3$
- 110kV/20kV-transformer : 31.5 MVA
- u_k of transformer : 12.3%
- short circuit capacity : < 214…234 MVA

2.2.2 Characteristics of the common electrical 20kV supply system C2

The characteristics are according to European Standard EN 50160. Some typical data is listed below:

- frequency: 50 Hz ± 1.0 %
  voltage: 20 kV ± 10 %
- phase imbalance : < 2.0 %
- total harmonic content : < 8 %

© GSI Helmholtzzentrum für Schwerionenforschung GmbH
Planckstraße 1, 64291 Darmstadt

2. harmonic : < 2.0 %

3. harmonic : < 5.0 %

ν -th harmonic : $< (1+\frac{25}{\nu})$ % for $5 \leq \nu < 17$
: < 2 % for $\nu = 17$
: < 1.5 % for $\nu = 19, 23, 25$
with $\nu = 6\,K \pm 1$ and k = 1,2,3

- 110kV/20kV-transformer : 63 MVA
- u_k of transformer : 10%
- short circuit capacity : < 514 MVA

2.2.3 Characteristics of the pulsed power electrical 20kV supply system PP1/PP2

This is the normal operation mode. The feeding lines are paralleled at 20 kV level.

The characteristics are according to IEC Standard 61000-2-4 (environment class 2). Some typical data is listed below:

- frequency: 50 Hz ± 1.0 %
  voltage: 20 kV +/-10%
  including flicker of <9 % at 3 Hz
- phase imbalance : < 2.0 %
- total harmonic content : < 8 %
  2. harmonic : < 2.0 %
  3. harmonic : < 5.0 %
  ν -th harmonic : $< (1+\frac{25}{\nu})$ % for $5 \leq \nu < 17$
  : < 2 % for $\nu = 17$
  : < 1.5 % for $\nu = 19, 23, 25$
  with $\nu = 6\,K \pm 1$ and k = 1,2,3
- 110kV/20kV-transformer : 63 MVA // 63 MVA
- u_k of transformers : 10% // 10%
- short circuit capacity : 545 MVA

© GSI Helmholtzzentrum für Schwerionenforschung GmbH
Planckstraße 1, 64291 Darmstadt

2.2.4 Characteristics of the pulsed power electrical 20kV supply systems PP1 and PP2

This is **not** the normal operation mode. The feeding lines are **not** paralleled at 20 kV level. The characteristics of each system are according to IEC Standard 61000-2-4 (environment class 2). Some typical data is listed below:

- frequency: 50 Hz ± 1.0 %
  voltage: 20 kV +/-10%
- phase imbalance : < 2.0 %
- total harmonic content : < 8 %
  2. harmonic : < 2.0 %
  3. harmonic : < 5.0 %
  ν-th harmonic : < $(1+\frac{25}{\nu})$ % for $5 \leq \nu < 17$
  : < 2 % for $\nu = 17$
  : < 1.5 % for $\nu = 19, 23, 25$
  with $\nu = 6\,K \pm 1$ and $k = 1,2,3$
- 110kV/20kV-transformer : 63 MVA
- u_k of transformer : 10%
- short circuit capacity : < 380 MVA

© GSI Helmholtzzentrum für Schwerionenforschung GmbH
Planckstraße 1, 64291 Darmstadt

2.3 Characteristics of the 400V AC supply system (common/pulsed)

There are 400V low voltage distributions for the common supply systems C1, C2 and C3 and the pulsed power supply system PP1/PP2. Their main characteristics are defined by the feeding 20kV systems. Common to all of them are the characteristics given below:

- line voltage : 400V
- System : TN-S (three phases + neutral + PE)
- 20kV/400V-transformer : rated power as given below
- Short time over voltage : 1.5kV$_{rms}$, phase to phase or phase to ground
- Transient voltage surge : 2.5kV$_{peak}$

The 400V secondary star mid-point of the transformer is earthed at the low voltage distribution and the neutral is directly distributed to the loads. Thus, the neutral **must not** be earthed at any other point.

Depending on the connected loads there are three power ratings for the low voltage distributions:

Power Rating	**1 MVA**	**2 MVA**	**4 MVA**
Transformer (20kV/400kV)	1 MVA	2 MVA	2 x 2 MVA parallel
u_k	6%	6%	6% // 6%
short circuit capacity	< 15.5…16 MVA	< 29…31 MVA	< 51…59 MVA

Note: With the 4 MVA configuration, the maximum shortcut current of the most standard industrial switch gear components of 50 kA may be exceeded (total system impedance is to be considered).

© GSI Helmholtzzentrum für Schwerionenforschung GmbH
Planckstraße 1, 64291 Darmstadt

2.4. Connecting loads to electrical power

Note: Unless otherwise noted, all 3-phase AC voltages are given phase-to-phase, single phase AC voltages are given phase-to-neutral.

Electrical loads can be connected to the common power systems or to the pulsed power systems (see 2.1). The assignment to a power system depends on the rated power of the electrical load, its working principle and according to this on the power exchanged with the power grid. Thus a large number of small electrical loads operating in a synchronized mode can be decided to be connected to the pulsed power systems. The assignment is given by FAIR GmbH.

There is a second way to classify Electrical Loads in the FAIR facilities according to their rated power (S_n):

- small electrical loads < 10 kVA
- medium electrical loads $10\ \text{kVA} \leq S_n < 500\ \text{kVA}$
- large electrical loads ≥ 500 kVA

In special cases the assignment of electrical loads to a classification can be changed in agreement with FAIR GmbH.

Small and medium electrical loads are connected to the 400V three phase supply system. All input terminals, switch gears and transformers are part of the electrical loads. The type of the supply net is TN-S. Take care for symmetrical loads to avoid currents on neutral line.

Large electrical loads of high power designed for 20 kV have to be delivered including transformers as part of the load which are connected to the supply system via 20kV switch gear. The transformer is to be placed in a nearby transformer box of the building. The 20kV switch gear is scope of supply of FAIR GmbH.

© GSI Helmholtzzentrum für Schwerionenforschung GmbH
Planckstraße 1, 64291 Darmstadt

All transformers are of dry type and are foreseen for indoor installation. Oil insulated transformers are not allowed to be installed.

The electrical supply for the control electronics of medium or high power loads can be but do not have to be derived from a separate supply system (230 V single phase or 400 V three phase, low voltage distribution of FAIR GmbH) via a miniature circuit breaker in the electrical load.

2.5 Locations of Electrical Loads

All electrical loads are foreseen for indoor installation. The cabinets of many electrical loads, like power converters, will be placed on a metal base structure which is part of the false floor of the device compartment or converter hall. The false floor has typically a height of 0.5 m and can carry a local peak load of 5000N and a distributed load of 30000N/m².
Separate transformer boxes for the 20kV transformers of converters of high power will be provided. The transformer boxes are located close to the converter hall or converter room (see also 2.4)

2.6 400 V AC Clean Power System

A 400 V AC “Clean Power System” will be provided for measurement purposes. Only loads which comply with the requirements of DIN EN 61000-3-3 are allowed to be connected to this system.

2.7 UPS-System

A decentralized UPS-System for 400 V AC will be provided. The minimum buffer time is 15 minutes for general purposes; network components will be buffered for 30 minutes. If any equipment incorporates its own UPS, it has to comply with these limits.

© GSI Helmholtzzentrum für Schwerionenforschung GmbH
Planckstraße 1, 64291 Darmstadt

All decentralized UPS devices are connected to a supervisory message system which can be accessed by the accelerator control system. This interface is specified by FAIR GmbH and/or in the Control System Specification.

2.8 Five-Class EMC-Concept for Cables

To avoid electrical interferences and achieve good Electro-Magnetic Compatibility (EMC), all electrical systems have to be designed considering separated cabling for:

- Class 1: Power cables
- Class 2: Control cables
- Class 3: Signal cables for measuring signals
- Class 4: Fiber optic cables
- Class 5: Bus cables (Ethernet, Profibus, Interbus, etc.)

If some types of the cables mentioned above are routed over the same cable tray, metal separating strips must be installed on the tray for separation.

2.9 Additional Equipotential Bonding System

In addition to the potential equalization according to DIN VDE 0100 Part 410 and 540 further measures are taken within the accelerator and within the experimental buildings to create a low-inductive ground system.
Adjacent reinforcement steel meshes are connected in an electrically well conducting way before covered by concrete. Furthermore, equidistant connection points (distance approx. 7 m) are existing to connect the reinforcement steel meshes to a copper bar of 10mm x 100mm cross section which runs in parallel to every beam line.

© GSI Helmholtzzentrum für Schwerionenforschung GmbH
Planckstraße 1, 64291 Darmstadt

3. Interactions of Electrical Loads with the Environment

3.1 Electrical Power

3.1.1 Interactions of electrical loads with the common electrical supply systems C1, C2, C3

The limits for harmonic currents are defined for the three cases as given below.

- Case A: single phase electrical loads with line currents $I_N \leq 16$ A
- Case B: three phase electrical loads with apparent power $S_N \leq 200$ kVA
- Case C: three phase electrical loads with apparent power $S_N > 200$ kVA.

Case A:

The limits for the harmonic currents are defined in accordance to EN 61000 - 3 - 2, table 1, as given below.

Table 1: Limits of harmonic currents

harmonic number ν	allowable peak value of harmonic current A
odd harmonic currents	
3	2.3
5	1.14
7	0.77
9	0.40
11	0.33
13	0.21
15 ≤ n ≤ 39	0.15 x 15/n
even harmonic currents	
2	1.08
4	0.43
6	0.30
8 ≤ ν ≤ 40	0.23 x 8/ ν

© GSI Helmholtzzentrum für Schwerionenforschung GmbH
Planckstraße 1, 64291 Darmstadt

Case B:

The allowed harmonic current content

$$p_v = I_v / I_1 \qquad \text{with harmonic number } v \text{ and fundamental current } I_1$$

is listed in table 2. The values for odd harmonic numbers (cannot be divided by 3) are derived from practical values of 6 pulse rectifiers. The values for odd harmonic numbers (can be divided by 3) and for even harmonic numbers are derived from the tolerable voltage harmonics according to EN 61000-2-4.

harmonic number ν	allowable harmonic current content p_v in %
odd harmonics (cannot be divided by 3)	
5	21
7	11
11	7.5
13	5.5
17	3,5
19	2.7
23	1.8
25	1.5
odd harmonics (can be divided by 3)	
2	11.3
9	1.1
15	0.2
21	0.05
even harmonics	
2	6.8
4	1.7
6	0.6
8	0.4
10	0.35

Table 2: Allowable harmonic current content

In addition to the values listed in table 2 the rule given below is mandatory:

© GSI Helmholtzzentrum für Schwerionenforschung GmbH
Planckstraße 1, 64291 Darmstadt

If there is a number n ≥ 2 of electrical loads of the same rating and the same type, then half of the loads must be equipped with input transformers which are phase shifted by 30° in respect to the transformers of the second half of the loads. Two loads with phase shifted transformers connected to the same distribution bus bar behave like a 12-pulse load to the supply system.

In case of technical difficulties in keeping the listed values the problem has to be clarified with FAIR GmbH.

Case C:

Electrical loads with apparent power S_N > 200 kVA must be built as a 12-pulse topology (at least). The harmonic current content p_v has to be clarified with FAIR GmbH, if it is not specified in the detailed specification of the electrical load.

3.1.2 Interactions of electrical loads with the pulsed electrical supply system PP1/PP2

The allowed harmonic currents of electrical loads are given by the same relation as stated for the common supply systems (cases A, B, C).

The harmonic voltages caused by single very large electrical loads, like power converters in the MVA range, need special attention, and the connection to the supply system must be discussed in detail and agreed with by FAIR GmbH.

3.2 Power Dissipation

3.2.1 Power Dissipation (Air Cooling)

Components like power electronics with total power dissipation during operation <200W, transformers, inductors, capacitors and control electronics are allowed to be air cooled. For electronic units assembled in 19” racks, maximum power dissipation to air of 1.5 kW is allowed.

© GSI Helmholtzzentrum für Schwerionenforschung GmbH
Planckstraße 1, 64291 Darmstadt

The power dissipations to air have to be calculated and specified.

Transformers and inductors > 1 kVA shall have **isolation class F**, **but** temperature sensors must provide an interlock in case of **T > 120°C**.

All necessary fans and air filters are part of the electrical load and must be easily exchangeable. The warm air has to be let out at the top of the cabinet.

3.2.2 Power Dissipation (Water Cooling)

Water cooling is mandatory for cooling electronic power components (IGBTs, thyristors, power diodes, power transistors) having a power dissipation during operation >200W as well as electronic units assembled in 19" racks dissipating more than 1.5 kW.

The materials in the cooling circuit shall be compatible with the use of demineralised water. Any material other than stainless steel and copper must be identified in the design report and need formal acceptance of FAIR GmbH.

Additionally the following terms apply:

- The max. allowed outlet temperature is 45°C.
- Power dissipation to water has to be calculated and specified.
- Water flow q in l/minute has to be specified.
- Provisions must be taken to control the water flow according to the requirements of the electrical load (Flow-meters, control valves).
- To indicate insufficient flow of water an indication (flow switch) must be installed to create an interlock and alarms.
- The difference pressure required must be specified in the design report.

© GSI Helmholtzzentrum für Schwerionenforschung GmbH
Planckstraße 1, 64291 Darmstadt