Document Title:	**Technical note of the connection of the Coaxial power cables inside power converters**
Description:	This document describes the principle of connection of the coaxial power cables inside a power converter.
Division/ Organization:	GSI-LOEP
Field of application:	Project FAIR@GSI

Document History:

Version	Prepared by:	Checked, Date	Released, Date	Comment
V0.1	V. Plyusnin, H. Welker, A. De las Vecillas			Pre-Release
V1.0	V. Plyusnin, H. Welker, A. De las Vecillas			Frist Release
V1.1	V. Plyusnin, H. Welker, A. De las Vecillas			Second Release
V1.2	V. Plyusnin, H. Welker, A. De las Vecillas	02.06.2016	02.06.2016	Third Release Change in Figure 4
V1.3	V. Plyusnin, H. Welker, A. De las Vecillas, B. Rück	17.01.2017	17.01.2017	Fourth Release Change in Figure 4
V1.4	V. Plyusnin, H. Welker, B. Rück	23.05.2017	23.05.2017	Fifth Release Figure 5 new
V1.5	V. Plyusnin, H. Welker, B. Rück	22.01.2018	22.01.2018	Change in Figure 4
V1.6	V. Plyusnin, H. Welker, B. Rück	27.04.2018	27.04.2018	Change in Figure 4

EDMS **1538212 v.8** status **Released** access **Restricted**
F-TN-PC-02e_PCs-connection-of-coaxial-cables_v1.6.pdf modified **2018-05-24 12:44**

Index

1. Abstract 3

2. Connection of the coaxial power cables inside of Power Converters 4

1. Abstract

This document describes the principle of connection of the coaxial power cables inside a power converter. Also, a drawing with all the necessary dimensions is included.

2. Connection of the coaxial power cables inside of Power Converters

The connections of the coaxial cable from the power converter are to be done in a specific way. In order to install these cables, the manufacturer of the power converter has to provide specially designed copper connectors for the cable terminals (see Figure 2, as an example, details in Figure 4). To assure a proper connection of the outer conductor to the copper clamp a copper bushing is fixed over it (Figure 1). This is done by the Company.
Finally, at the magnet or at the power converter, the prepared cable (Figure 1) is fixed using the connectors and the cable shield is connected with the help of a clamp to a grounded frame (Figure 3, example of a magnet connection box). This is prepared by the Company as well.

The detailed drawing of the connectors is shown in Figure 4.

It is to be noted that the copper connectors, the clamp for the shield connection and the fixing rails must be provided by the manufacturer of the power converter. The suitable/appropriate coaxial cable for the connection and the copper bushing will be provided by the Company. Also, the installation and mounting of the cables will be done by the Company.

The connection principle in Figure 3 and in Figure 4 is shown for only one cable. If more cables have to be connected in parallel, this principle shown in Figure 4 has to be extended by the manufacturer of the power converter. (see Figure 5).

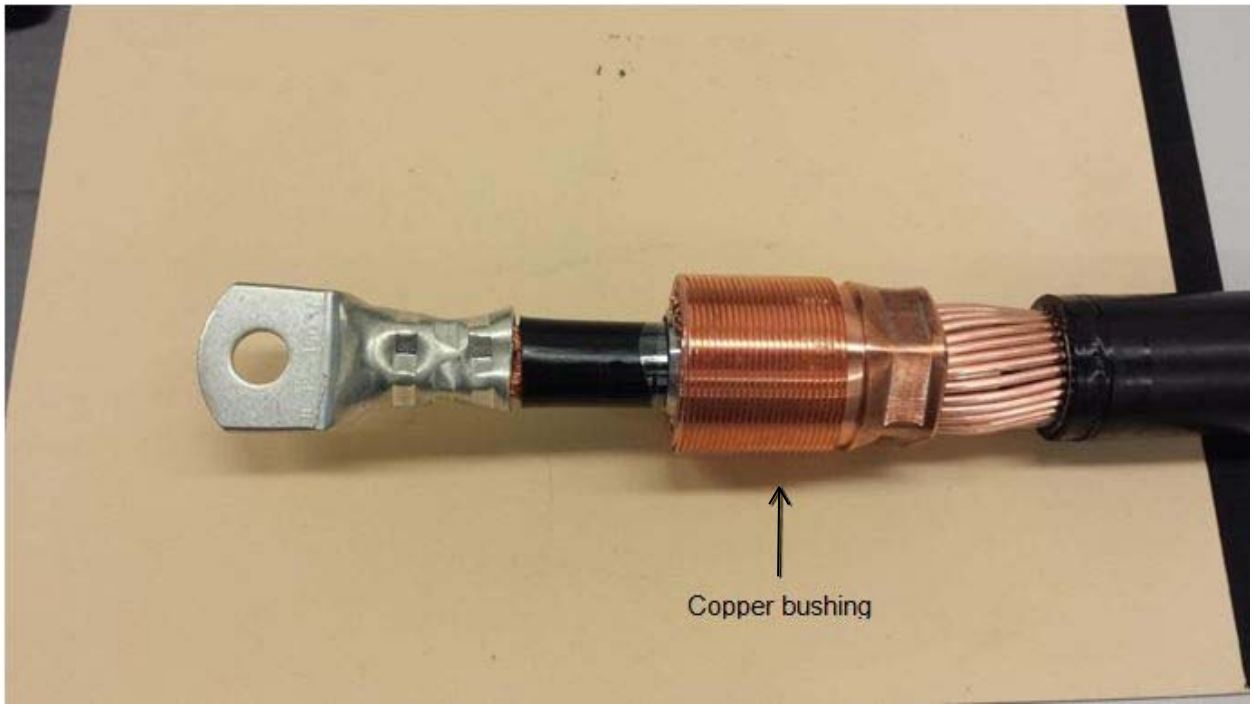

Figure 1: Outer conductor with the copper bushing fixed over it.

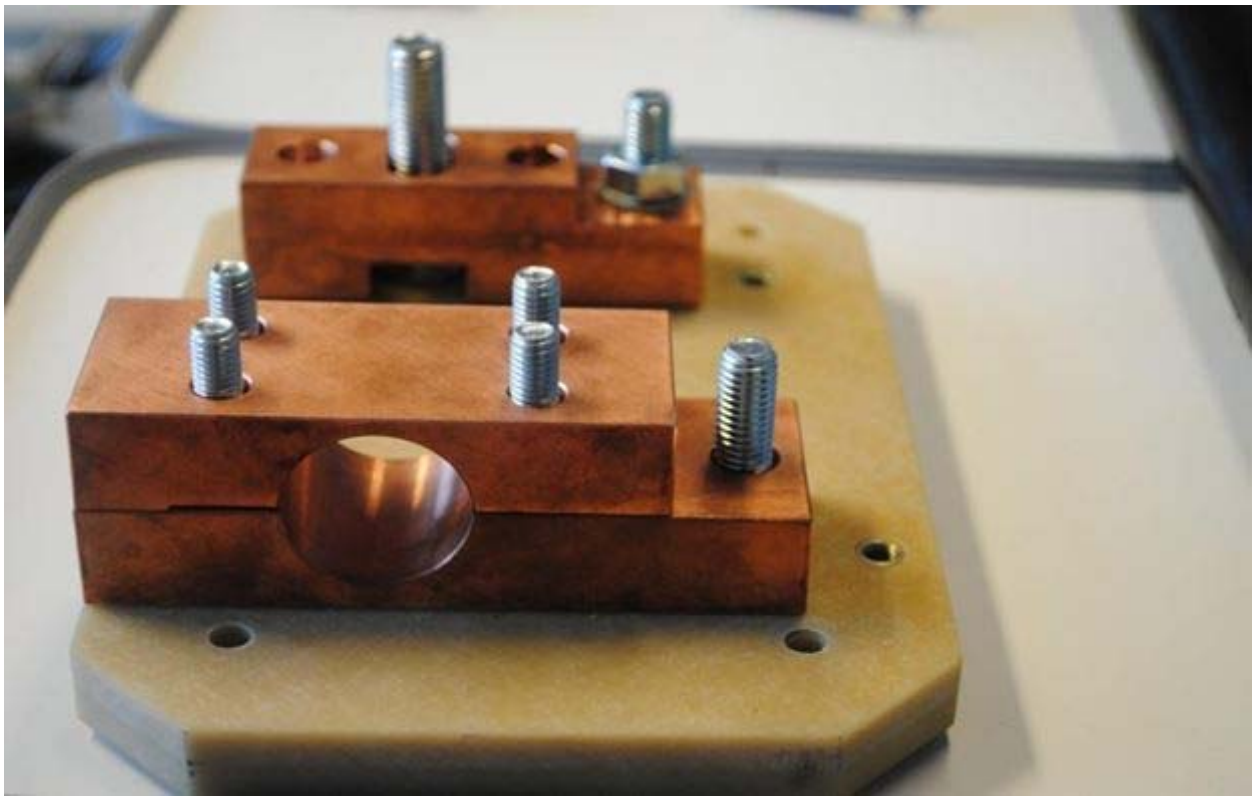

Figure 2: Example of the connector for the outer conductor of the coaxial cable to be provided by the manufacturer of the power converter.

Figure 2 and Figure 3 show the connection of the coaxial cable to a magnet. The manufacturer of the power converter has to follow this principle design, but the connector of the coaxial cable to the power converter just has to meet the dimensions included in the table of Figure 4.

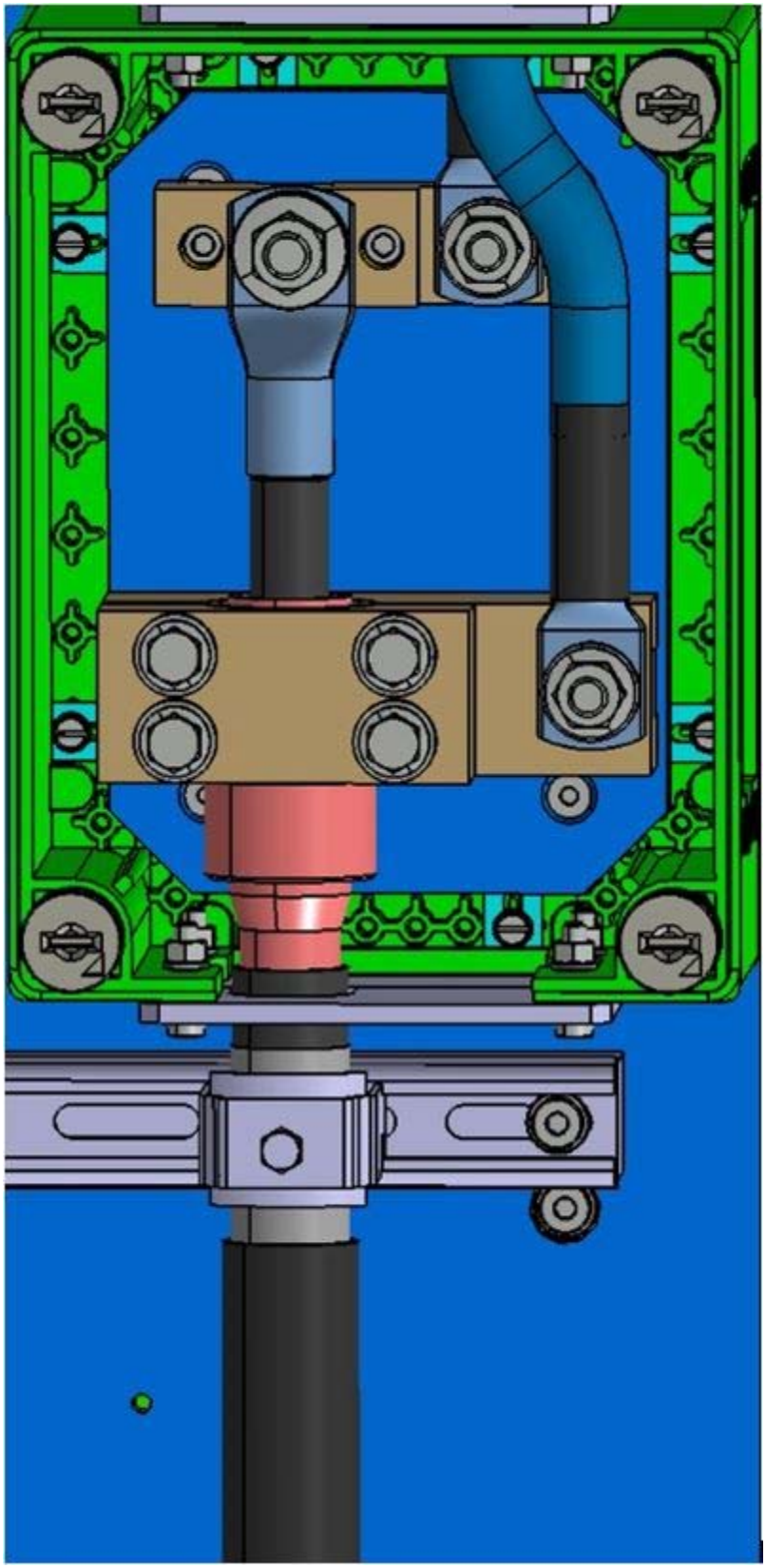

Figure 3: Cable connections at a magnet connection box i.e. the inner and outer conductors are clamped and the shield is grounded via a clamp. The shield is connected, with the help of a metal clamp, to the frame. The frame will be grounded.

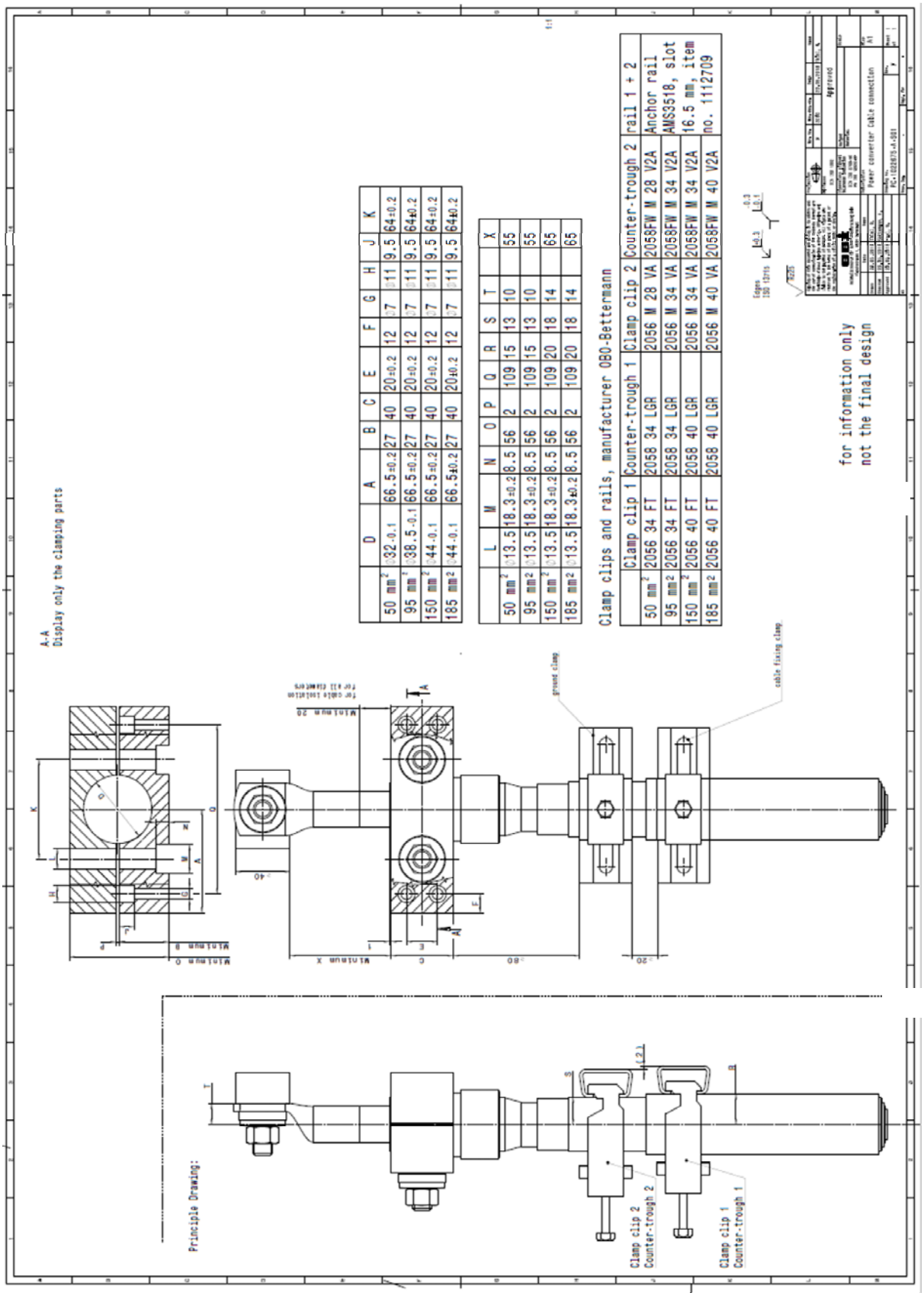

Figure 4: Power converter cable connection
(for more detailes see drawing at the end of the document)

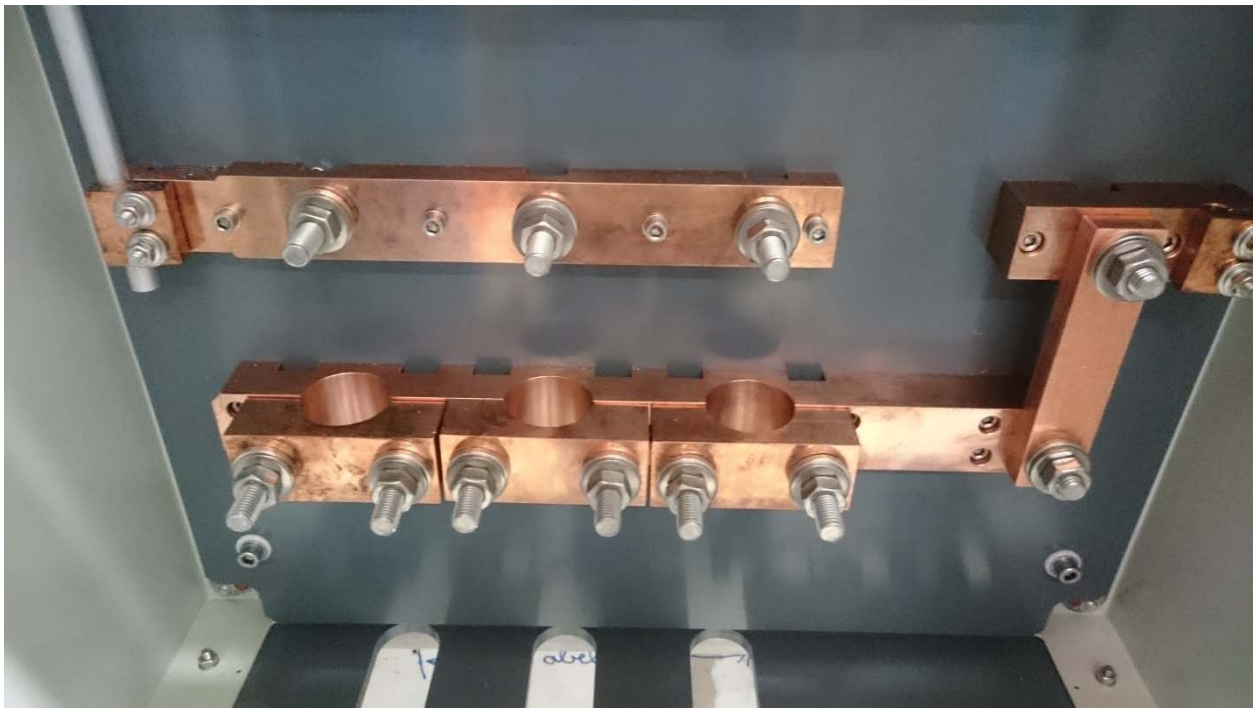

Figure 5: Cable connection prepared for three cables in parallel.

Principle Drawing:

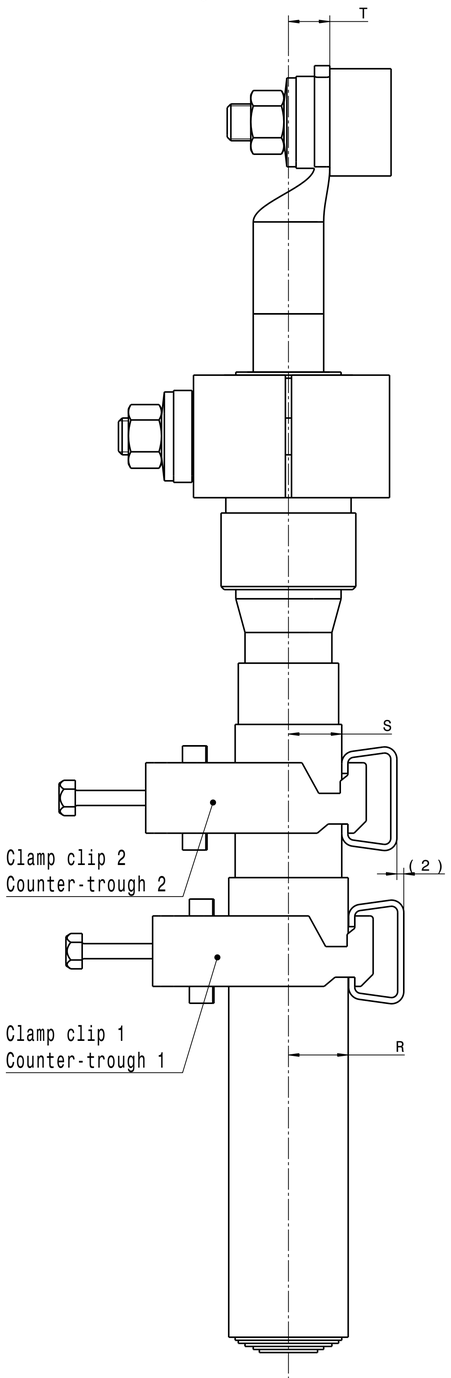

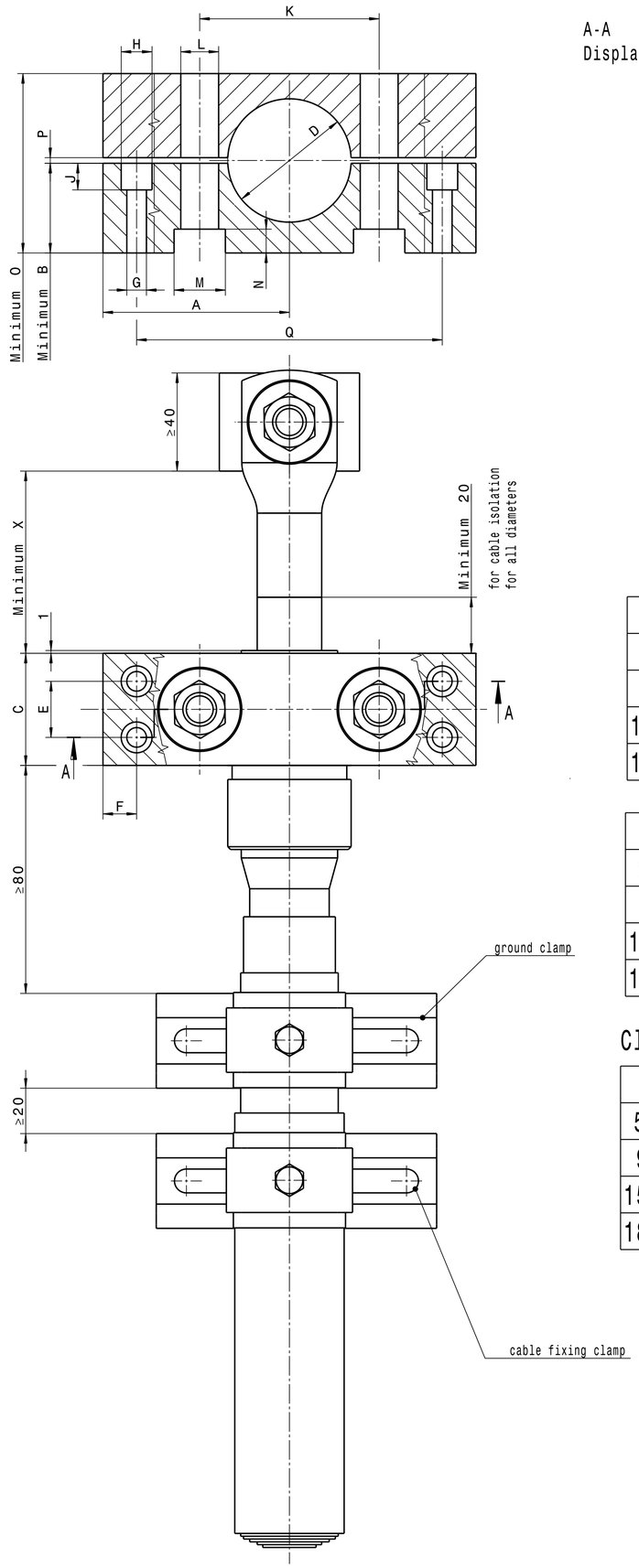

A-A
Display only the clamping parts

	D	A	B	C	E	F	G	H	J	K
50 mm²	ϕ32 -0.1	66.5 ±0.2	27	40	20 ±0.2	12	ϕ7	ϕ11	9.5	64 ±0.2
95 mm²	ϕ38.5 -0.1	66.5 ±0.2	27	40	20 ±0.2	12	ϕ7	ϕ11	9.5	64 ±0.2
150 mm²	ϕ44 -0.1	66.5 ±0.2	27	40	20 ±0.2	12	ϕ7	ϕ11	9.5	64 ±0.2
185 mm²	ϕ44 -0.1	66.5 ±0.2	27	40	20 ±0.2	12	ϕ7	ϕ11	9.5	64 ±0.2

	L	M	N	O	P	Q	R	S	T		X
50 mm²	ϕ13.5	18.3 ±0.2	8.5	56	2	109	15	13	10		55
95 mm²	ϕ13.5	18.3 ±0.2	8.5	56	2	109	15	13	10		55
150 mm²	ϕ13.5	18.3 ±0.2	8.5	56	2	109	20	18	14		65
185 mm²	ϕ13.5	18.3 ±0.2	8.5	56	2	109	20	18	14		65

1:1

Clamp clips and rails, manufacturer OBO-Bettermann

	Clamp clip 1	Counter-trough 1	Clamp clip 2	Counter-trough 2	rail 1 + 2
50 mm²	2056 34 FT	2058 34 LGR	2056 M 28 VA	2058FW M 28 V2A	Anchor rail AMS3518, slot 16.5 mm, item no. 1112709
95 mm²	2056 34 FT	2058 34 LGR	2056 M 34 VA	2058FW M 34 V2A	
150 mm²	2056 40 FT	2058 40 LGR	2056 M 34 VA	2058FW M 34 V2A	
185 mm²	2056 40 FT	2058 40 LGR	2056 M 40 VA	2058FW M 40 V2A	

Edges ISO 13715 +0.3 -0.3 -0.1

Rz25

for information only
not the final design

Copying of this document and giving it to others and the use of communication of the contents thereof are forbidden without express authority. Offenders are liable to the payment of damages. All rights are reserved in the event of the grant of a patent or the registration of a utility model or design.

Projection	Rev. No.	Rev.-Doc.-No.	Date	Name
	F	2080	23.05.2018	Thiel, R.

Surfaces: DIN ISO 1302 — Approved

Dimensions without tolerance indication: DIN ISO 2768-mK, EN ISO 13920-BF

Weight: — Material: — Scale:

GSI Helmholtzzentrum für Schwerionenforschung GmbH
Planckstrasse 1, 64291 Darmstadt

	Date	Name
Drawn	23.05.2018	Thiel, R.
Checked	23.05.2018	Gottsmann, A.
Approved	23.05.2018	Faul, M.

Description: Power converter Cable connection — Size: A1

Drawing No.: PC-1022675-A-S01 — Rev.: F — Sheet 1 of 1

Prev. Dwg.: . — Repl. for: .