Document Title:	**Common Specification on Power Converters**
Description:	This document summarises the Common Specifications for the Power Converters to be used for powering the magnets in the FAIR Accelerator Project.
Division/ Organization:	GSI-LOEP
Field of application:	Project FAIR@GSI

Document History:

Version	Prepared by:	Checked, Date	Released, Date	Comment
V 0.1	Horst Welker, 07.06.2010			Draft version
V 0.2	Horst Welker, 25.05.2011			Draft version
V 1.0	Horst Welker, 12.09.2011			Draft version
V 1.1	Horst Welker, 30.05.2012			Draft version
V 1.2	H. Welker / H. Ramakers, 10.06.2012			Draft version
V 1.3	H. Welker / H. Ramakers, 13.06.2012			First version
V 1.4	H. Welker / H. Ramakers, 27.04.2015			Review of First Version

Abstract

This document summarises the Common Specifications for the Power Converters to be used for powering the magnets in the FAIR Accelerator Project.

Table of Contents

1. Purpose and Classification of the Document 6
2. Abbreviations, Terms and Definitions 6
3. Scope of the technical System 7
3.1. System Overview 7
3.2. Limits of the System 7
3.3. Basis of Concept 7
4. Engineering Standards and Design Principles 8
4.1. Standards 8
4.2. Safety 8
4.3. Design Principles 8
5. Environmental Electrical Conditions 8
5.1. The 20kV AC Supply System 8
5.1.1. Characteristics of the electrical 20 kV supply systems 9
5.1.2. Characteristics of the 400 V AC supply system (common/ pulsed) 9
6. Other environmental Conditions 10
6.1. Cooling Arrangements 10
6.1.1. Ambient conditions 10
6.1.2. Water cooling 11
6.2. Location of Power Converters 11
6.2.1. False floor 11
6.2.2. Separate installation rooms 11
6.3. Connecting cables 12
6.3.1. Coaxial power cables 12
6.3.2. Water cooled cables 13
7. Interactions of Power Converters with the Environment 13
7.1. Electrical Power 13
7.1.1. Interactions of power converters with the supply systems C1, C2, C3, PP1 and PP2 13
7.1.2. Electro Magnetic Compatibility EMC 13
7.2. Power Dissipation 14
7.2.1. Power dissipation (air cooling) 14
7.2.2. Power dissipation (water cooling) 14
8. General Descriptions of Power Converters 15
8.1. Definitions 15
8.1.1. Total deviation 15
8.1.2. Resolution of the Set Value 16
8.1.3. Modes of operation 16
8.1.4. Classes of Power Converters 17
8.2. Voltage Ripples 18
8.3. Converter Control 18
8.3.1. Adaptive Control Unit (ACU) 18
8.3.2. Control circuits and Set Values 22
8.3.3. Control panel 23
8.3.4. Installation of ACU system 23

8.3.5. Interface to the control system of FAIR 24
8.4. Digital DCCT 24
8.5. Design Principles 24
8.5.1. Over-voltage and voltage transients on the feeding line 24
8.5.2. Inrush current at turning on 24
8.5.3. Choice of voltage level in the power part 25
8.5.4. Transformers and inductors 25
8.5.5. Filter capacitors (DC-link) 25
8.5.6. Semiconductors 26
8.5.7. Cabinet properties 26
8.5.8. Mechanical layout 27
8.5.9. Cooling arrangements 30
8.5.10. Interlocks 31
8.5.11. Beam interlock system 32
8.5.12. Machine Protection system 34
8.5.13. Connecting power converters to electrical power 35
8.5.14. Connecting power converters to ground 36
8.6. Failures and Reliability 36
9. Quality Assurance, Tests and Acceptance 36
9.1. Quality Assurance System of the Contractor 37
9.2. Factory Acceptance Test (FAT) 38
9.2.1. FAT of a pre-series power converter 39
9.2.2. FAT of power converters of the series 40
9.3. Site Acceptance Tests (SATs) 41
9.3.1. SAT A 41
9.3.2. SAT Ba 42
10. Transportation 43
11. Documentation 43
11.1. Documents of the Tendering Process 43
11.2. Final Documentation 43
12. Warranty 44
I. Related Documentation 44
II. Attached Documents 45

List of Tables:

Table 1 List of Abbreviations 6
Table 2 The data for the low voltage distribution system 10

List of Figures:

Figure 1 20 kV AC supply system with feeding lines and feeding transformers 9
Figure 2 Cross-sectional view of the coaxial cable (left principle, right actual cable) 12
Figure 3 Definition of total deviation 15
Figure 4 Definitions of operation mode type A 16
Figure 5 Definitions for operation mode type A 17
Figure 6 Voltage Ripple 18
Figure 7 The use of the ACU system in a power converter 19
Figure 8 An example of a 19'' frame of a standard ACU system 20
Figure 9 Typical application of the ACU system inside a power converter 22
Figure 10 Example of name plate with CID 30
Figure 11 Beam-Interlock System: Version A 33
Figure 12 Beam-Interlock System: Version B 34

1. Purpose and Classification of the Document

This document describes the general technical requirements of all parts and components of the power converters planned for the FAIR Project. Detailed technical information concerning the power converters for the different accelerators and beam lines is given in the dedicated detailed specifications. General legal and technical requirements, valid for all the technical systems of FAIR, are described in the general specifications [1] and technical guidelines. These specifications and the guidelines are being referred in this document.
It must be noted that, while the statements given in this document override the statements in the general specifications and the technical guidelines, the statements in the detailed specifications override the statements in this document.

2. Abbreviations, Terms and Definitions

AC	Alternating Current
ACU	Adaptive Control Unit
ADC	Analogue to Digital Converter
CID	Component-ID (identification number)
CDR	Conceptual Design Report
DAC	Digital to Analogue Converter
DC	Direct Current
DCCT	DC Current Transformer
EMC	Electromagnetic Compatibility
FAIR	Facility for Antiproton and Ion Research
FAIR GmbH	International GmbH under German law aiming to realize the FAIR project – acting as contracting body
FAT	Factory Acceptance Test
FDR	Final Design Report
GSI	Helmholtz-Zentrum für Schwerionenforschung GmbH
HEBT	High Energy Beam Transport System
HESR	High Energy Storage Ring
IGBT	Insulated Gate Bipolar Transistor
NESR	New Experimental Storage Ring
RESR	Recycled Experimental Storage Ring
SAT	Site Acceptance Test
SCR	Silicon Controlled Rectifier
SFRS	Super Fragment Separator
SIS 100 / 300	Schwer-Ionen-Synchrotron (Heavy-Ion-Synchrotron), with maximum bending power of 100 or 300 Tm

Table 1 List of Abbreviations

3. Scope of the technical System

3.1. System Overview

In an accelerator/storage ring magnetic fields are needed for both the transporting and focussing of the beam. These magnetic fields are generated by the magnets which are distributed along the accelerators and the beam lines. The currents for the magnets will be controlled by the power converters with the common characteristics as described in this document.
In FAIR, power converters are needed for different machines and for different operation modes:

Linear accelerator:	The new proton linear accelerator needs power converters for DC operation or pulsed operation.
Synchrotrons:	The synchrotrons SIS100 and SIS300 need the ramped power converters with cycle frequencies up to 0.5 Hz.
Super Fragment Separator:	The SFRS needs DC power converters which are able to operate in a pulsed mode.
Storage rings:	The storage rings NESR, RESR, CR, and HESR need basically DC power converters with ramping capability for some special purposes.
Beam Transport System:	There are beam lines with different magnetic rigidities of 13, 18, 90 and 300 Tm. They need the power converters in DC, pulsed or fast pulsed mode.

3.2. Limits of the System

The power converters for the RF-systems, for injection and extraction kickers and for the experiments are not within the scope of this technical system. The Adaptive Control Unit (ACU) system (see chapter 8.3.1), which is integrated in every power converter, is described in this document but its specifications are out of scope of this document.

3.3. Basis of Concept

To allow an unrestricted accessibility and to increase the lifespan of the electrical components, all the power electronics and control electronics should be placed outside the hot radiated areas. Therefore the power converters are placed in the dedicated supply buildings beside the accelerator tunnels.
From the standardisation point-of-view, it is mandatory for all the power converters to use the ACU system and the digital DCCTs which will be provided

by the Company[1] (see chapter 8.3.1 and 8.4). All the power converters described in this document are either current or field regulated systems.

4. Engineering Standards and Design Principles

4.1. Standards

The design and the construction of a power converter have to comply with the standards and principles given in chapter 1.1 of the technical guideline “Electrical Design Rules and Regulations” [2]. In addition to [2], EN 61439 has to be taken into account.

4.2. Safety

The safety requirements are described in chapter 1.2 of the technical guidelines [2]
The language of safety instructions on all the operating panels must be in both languages English and German. Warning signs and other critical-safety notes must be in both the languages, English and German.

4.3. Design Principles

Beside the definitions in chapter 1.3 of the technical guidelines [2], further design principles for the main components and functionalities of a power converter are given in chapter 8.5 of this document.

5. Environmental Electrical Conditions

5.1. The 20kV AC Supply System

The FAIR facility has two 20 kV AC supply systems (Figure 1):

- The common supply system with three in normal operation independent 20 kV three-phase feeding lines C1, C2 and C3.
- The pulsed power supply system with two in normal operation paralleled 20 kV three-phase feeding lines PP1 and PP2.

[1] Company: FAIR GmbH

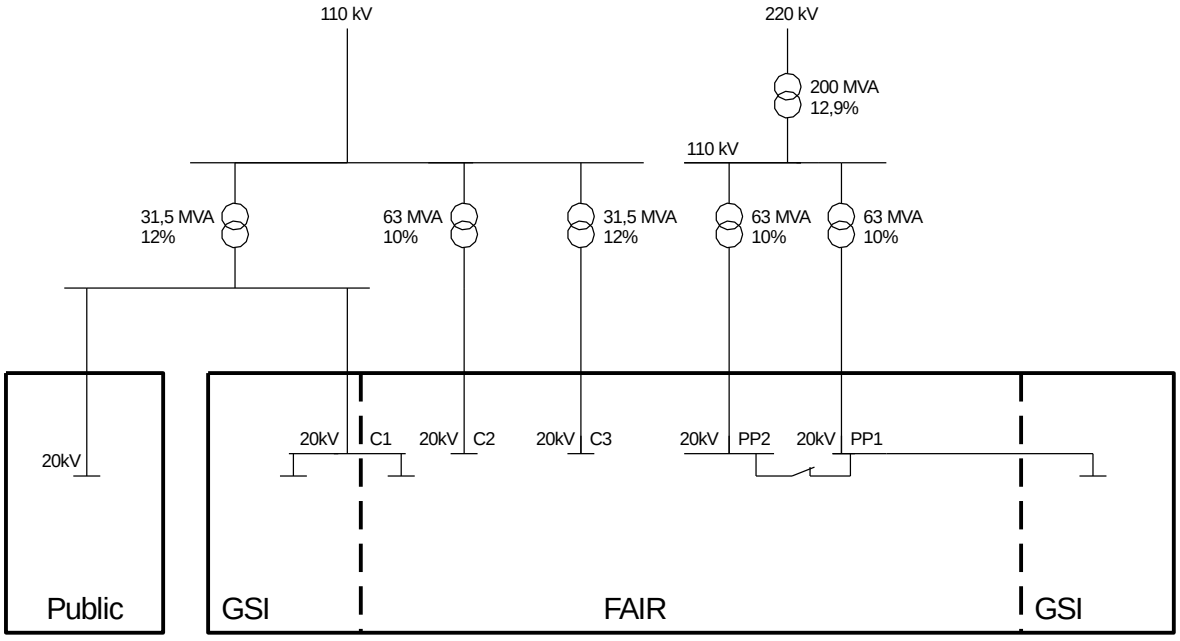

Figure 1 20 kV AC supply system with feeding lines and feeding transformers

The 20 kV feeding lines C1, C2 and C3 are connected via 110 kV/ 20 kV transformers to the public 110 kV-grid. While the feeding transformers of C2 and C3 are exclusively reserved for the FAIR facility, the feeding transformer of C1 feeds to GSI and a local public 20 kV-grid as well.
The feeding lines PP1 and PP2 are exclusively reserved for FAIR and GSI. They are connected via two 110 kV/ 20 kV transformers which in turn are connected to a common 220 kV/ 110 kV transformer to the public 220 kV-grid.

5.1.1. Characteristics of the electrical 20 kV supply systems

The characteristics of the 20 kV supply systems C1...C3, PP1 and PP2 are given in chapter 2.2.1 of the technical guidelines [2].

5.1.2. Characteristics of the 400 V AC supply system (common/ pulsed)

The common supply systems C1, C2 and C3 as well as the pulsed power supply system PP1/ PP2 comprise the 400 V low voltage distribution systems. The main characteristics of these distribution systems are defined by their 20 kV feeding systems. The distribution systems possess following common characteristics:

- Line voltage : 400 V
- System : TN-S (three phases + neutral + PE)
- 20 kV/400 V -transformer : Power rating is given in the table below
- Short time over voltage : 1.5 kV_{rms}, phase to phase or phase to neutral
- Transient voltage surge : 2.5 kV_{peak}

The 400 V secondary star mid-point of the transformer is earthed at the low voltage distribution and the neutral is directly distributed to the loads. Thus, the neutral **must not** be earthed at any other point. Depending on the connected loads there are three power ratings for the low voltage distributions:

Power Rating / Properties	**1 MVA**	**2 MVA**	**4 MVA**
Transformer (20 kV/400kV)	1 MVA	2 MVA	2 x 2 MVA parallel
u_k (short circuit voltage)	6%	6%	6% // 6%
short circuit capacity	< 17 MVA	< 33 MVA	< 67 MVA

Table 2 The data for the low voltage distribution system

Note: With the 4 MVA configuration, the maximum short-circuit current of most of the standard industrial switch gear components may exceed (total system impedance is to be considered) the usual value of 50 kA.

6. Other environmental Conditions

6.1. Cooling Arrangements

6.1.1. Ambient conditions

There are certain deciding parameters which must be considered from the cooling point-of-view. These parameters along with their permissible limits are as follows:

- altitude : < 200 m
- temperature variation for the interim storage of converters : -25°C to +50°C
- temperature variation to be considered for the design of the converters : +10°C to +40°C
- temperature variation for

the power transformers located in the transformer boxes : +5°C to +40°C
- ambient temperature for the converter operation : +18°C to +28°C
- relative humidity : max. 80%

6.1.2. Water cooling

Water cooling is mandatory for the electronic-power components like IGBTs, thyristors, power diodes and power transistors etc. (see also chapter 7.2). In this regard, it is advantageous to use the available de-ionized water system described in the technical guideline “Supply with cooled water” [3]. The main features of the water cooling system are as follows:

- Max. operating pressure : 13 bar
- Peak pressure : 15 bar
- Inlet temperature : 25°C ± 2°C
- Difference pressure : 10 bar
- Max allowed outlet temperature : 55°C
- Conductivity : < 1 µS/cm

The materials in the cooling circuit of the electronic power components should be compatible with the use of the de-ionised water. Therefore, any material other than stainless steel and copper must be identified in the design report and will need a formal acceptance of the Company.

6.2. Location of Power Converters

All the power converters are foreseen for indoor installation. The cabinets of the power converters will be placed on a metal base structure which is part of the false floor of the converter hall/ room.

6.2.1. False floor

The false floor has typically a height of 0.5 m. It can sustain a local peak load of 5000 N and a distributed load of 30000 N/m².

6.2.2. Separate installation rooms

There are separate rooms, close to the converter hall/ room, for the 20 kV transformers and for the other components like SCRs and inductors of high-power converters. All the components in these separate rooms are placed on the metal structure of a false floor.

6.3. Connecting cables

Similar types of cables will be used for connecting all the power converter outputs to their respective loads. The cable type, the cable dimensions and the number of cables placed in parallel are given in the corresponding detailed specification.

In general two different types of cables will be used depending on the application. These types are coaxial power cables and water cooled cables.
Whereas water cooled cables will be used for high currents in most of the cases coaxial power cables will be used to connect the power converter to the load.

6.3.1. Coaxial power cables

The principle structure of this kind of cable is shown in Figure 2 with a cross section of 150mm² for example

The coaxial cable is to be connected in a specific way. It is explained in an attached file [10], and principle drawings of the connectors are given in an attached file [11] with this document. The drawings in [11] are examples which are showing all the necessary dimensions to design the cable connectors.

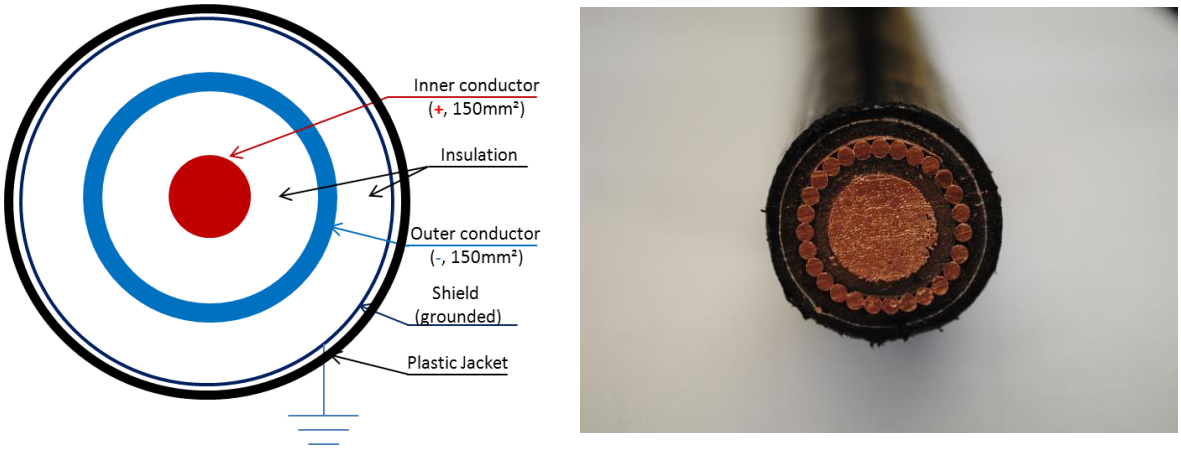

Figure 2 Cross-sectional view of the coaxial cable (left principle, right actual cable)

A possibility to change the polarity of the power converter by reversing the cable terminals has to be foreseen at the output of the power converter. To fulfil this requirement a construction with removable copper bars is needed.

6.3.2. Water cooled cables

All details concerning water cooled cables will be given in the detailed specification of the corresponding power converter.

7. Interactions of Power Converters with the Environment

7.1. Electrical Power

7.1.1. Interactions of power converters with the supply systems C1, C2, C3, PP1 and PP2

The allowed interactions of the power converters with the above referred supply systems are given in chapter 3.1 of technical guidelines [2].

7.1.2. Electro Magnetic Compatibility EMC

All the power converters have to fulfil the compatibility levels as per the following EMC standards:

- IEC 61000-2-4 (Environment – Compatibility levels in industrial plants for low frequency conducted disturbances)
- IEC 61000-6-4 (Generic Standards, Emission standard for industrial environments)

- EN 55011 Class A / Group 1 (Industrial, scientific and medical radio frequency equipment. Electromagnetic disturbance characteristics. Limits and methods of measurement).

To assure the compatibility as per IEC 61000-6-4, the voltage measurements are to be performed at maximum DC load current with voltage probe in the frequency range of 150 kHz to 30 MHz in steps of 10 kHz, for

- all AC power terminals to ground
- the output terminals (to the load) to ground.

The limit curve of the quasi peak measurement must not be violated.

7.2. Power Dissipation

7.2.1. Power dissipation (air cooling)

All the transformers, inductors, capacitors, control electronics and all the components, like power electronics, with a total power dissipation during operation <200 W are allowed to be air cooled. For all the electronic units assembled in 19" racks a maximum power dissipation of 1.5 kW (in total) to the air is allowed.
The power dissipation to air has to be calculated and documented.

7.2.2. Power dissipation (water cooling)

Water cooling is mandatory for the electronic power components (like IGBTs, thyristors, power diodes, power transistors etc.) having a power dissipation of >200 W during operation and also for the electronic units assembled in 19" racks dissipating more than 1.5 kW.
Additionally, the following terms will be applied:

- The maximum allowable outlet-water temperature is 55°C.
- Power dissipated to the water has to be calculated and documented.
- Water flow rate q in l/min has to be documented.
- There must be the provisions (eg. Flow-meters and control valves) to control the water flow according to the requirements of the electrical load.
- To indicate insufficient flow of water an indication (eg. Flow-meter) must be installed to create an interlock and/ or alarms.
- The required difference in the inlet and outlet-water pressure must be specified in the design report.

8. General Descriptions of Power Converters

8.1. Definitions

8.1.1. Total deviation

A performance criterion for power converter is the "total deviation". The total deviation is a measure for the difference of the actual value (X_i) of the controlled quantity to an ideal set value (W_i). It summarizes data for ripple, accuracy and stability.

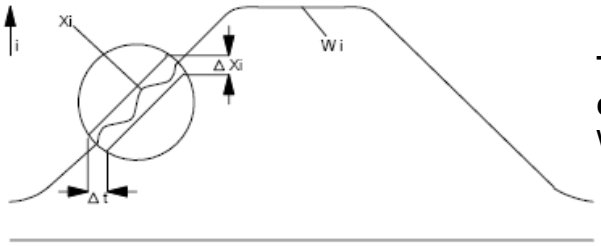

Total deviation of current
W_i = set value
X_i = actual value

Figure 3 Definition of total deviation

For the magnet-current power converters the controlled quantity is the magnet current (in special cases the magnetic field), and the total deviation is given to **ΔI**. Commonly the total deviation is given as a per unit value. In the technical part of the specification of the power converters for the:

- converters with mono-polar current polarity and defined minimum current, there is the per unit total deviation defined as $\boldsymbol{\delta_1 I = \Delta I / I}$, with the actual current I
- converters with bipolar currents, there is the per unit total deviation defined as $\boldsymbol{\delta_2 I = \Delta I / I_n}$, with the nominal current (rated current) I_n.

The δI-criterion must be fulfilled for

- Ramped power converters at any time of a machine cycle
- Pulsed power converters in flattop after a given delay time to the start signal.
- DC power converters at any time of normal operation

In case of field regulation the definitions above apply to the magnetic field.
In special cases variations of these terms are given in the relevant technical specification.

8.1.2. Resolution of the Set Value

If not stated otherwise in the detailed specifications the requested resolution is given by the total deviation

$\delta_2 I$ or by $\delta_1 I \times \frac{I_{min}}{I_{max}}$ with I_{min} as minimum load current and I_{max} as maximum load current

depending on the converter topology as described in chapter 8.1.1.

8.1.3. Modes of operation

There are three basic modes of operation. In general, for all the modes, the actual value of the magnet current has to follow the set value of the machine cycle without exceeding the given limits of the total deviation but, with some specific feature/ limitation mentioned below:

Type A : Ramping mode

The definitions for the operation mode A are shown in Figure 4.

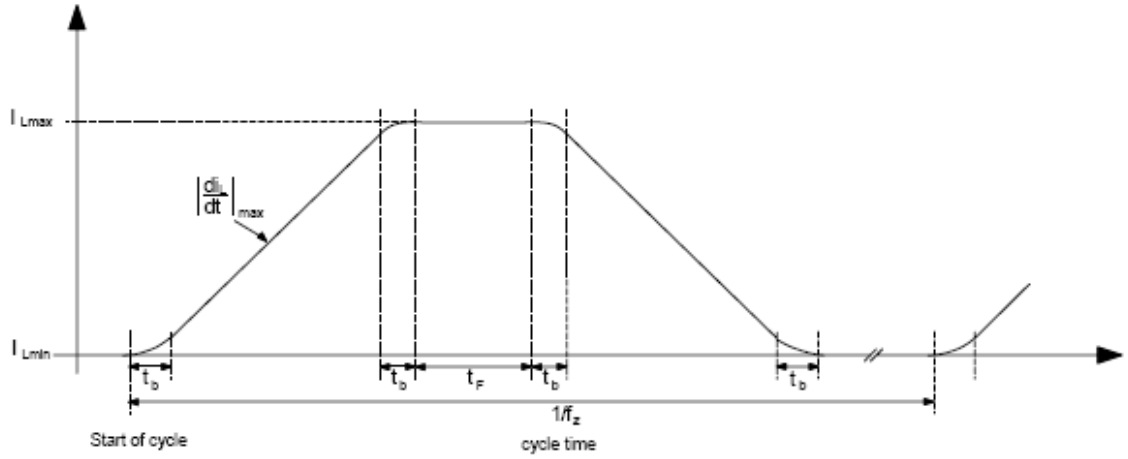

Figure 4 Definitions of operation mode type A

I_{Lmax}	maximum magnet-current
I_{Lmin}	minimum magnet-current
t_b	bending time
t_F	time during flattop
f_Z	cycle frequency
$\left(\frac{di}{dt}\right)_{max}$	maximum rate of change of current

Type B : Pulsed mode

The actual value of the magnet current has to correspond with the set value only during the flattop time. The definitions of the operation mode B are shown in Figure 5.

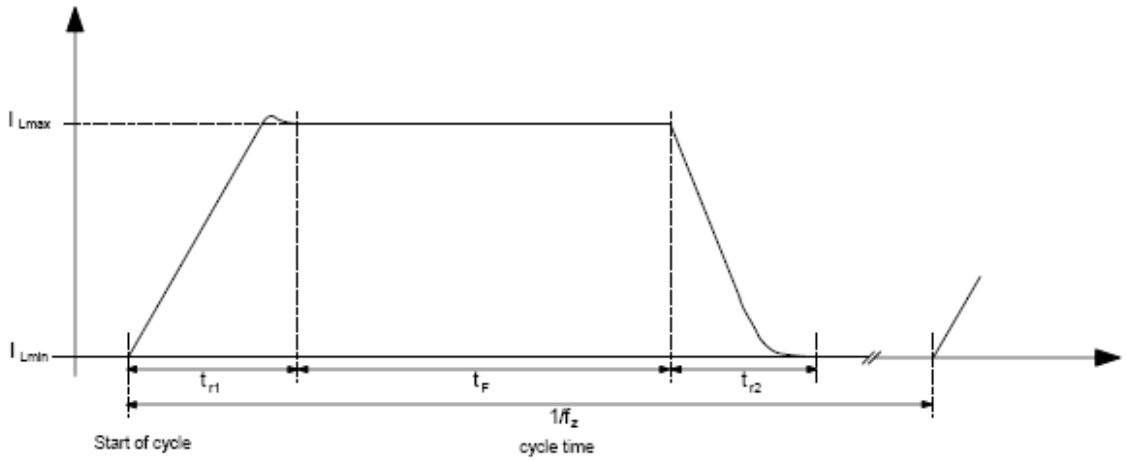

Figure 5 Definitions for operation mode type A

I_{Lmax}	maximum of the magnet current
I_{Lmin}	minimum of the magnet current
t_{r1}	rise time
t_{r2}	fall time
t_F	time during flattop
f_Z	cycle frequency

Type C : DC mode

In case of DC mode the flattop duration can be of few weeks.

8.1.4. Classes of Power Converters

There are three classes of the power converters:

- small power converters
- medium power converters
- large power converters.

The properties of these classes are described in chapter 8.5.8 and 8.5.13.

8.2. Voltage Ripples

The voltage ripple due to normal pulse modulated operation (ΔU in Figure 6), excluding the high frequency transients at the output of the power converter,

- has to be smaller than 1% of the full scale value of the output voltage,
- if the total deviation (as defined in chapter 8.1.1) is not violated, its value need not to be forced to be smaller than 1V.

These conditions are also valid for the voltage ripple to ground.

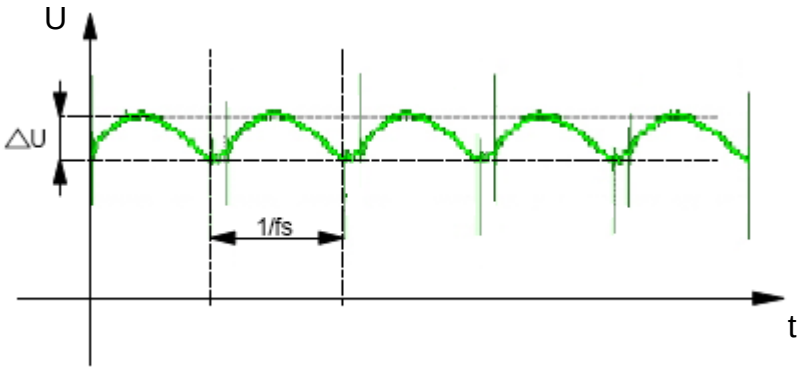

f_s : switching frequency

Figure 6 Voltage Ripple

The high frequency transients are determined by the levels defined in the EMC Standards EN 61000-6-4 (Generic Standards, Emission standard for industrial environments) and EN 55011 Class A / Group 1 (Industrial, scientific and medical radio frequency equipment, Electromagnetic disturbance characteristics and Limits and methods of measurement).
Note: see also chapter 7.1.2.

8.3. Converter Control

8.3.1. Adaptive Control Unit (ACU)

From the point-of-view of standardisation it has been decided that each power converter of the FAIR project will be equipped with an ACU system. The Company will provide the components of the ACU system, and the manufacturer of the power converter has to integrate these components.
The ACU system is a modular digital control system for power converters. Figure 7 gives a brief overview on the system and its application in a power converter.

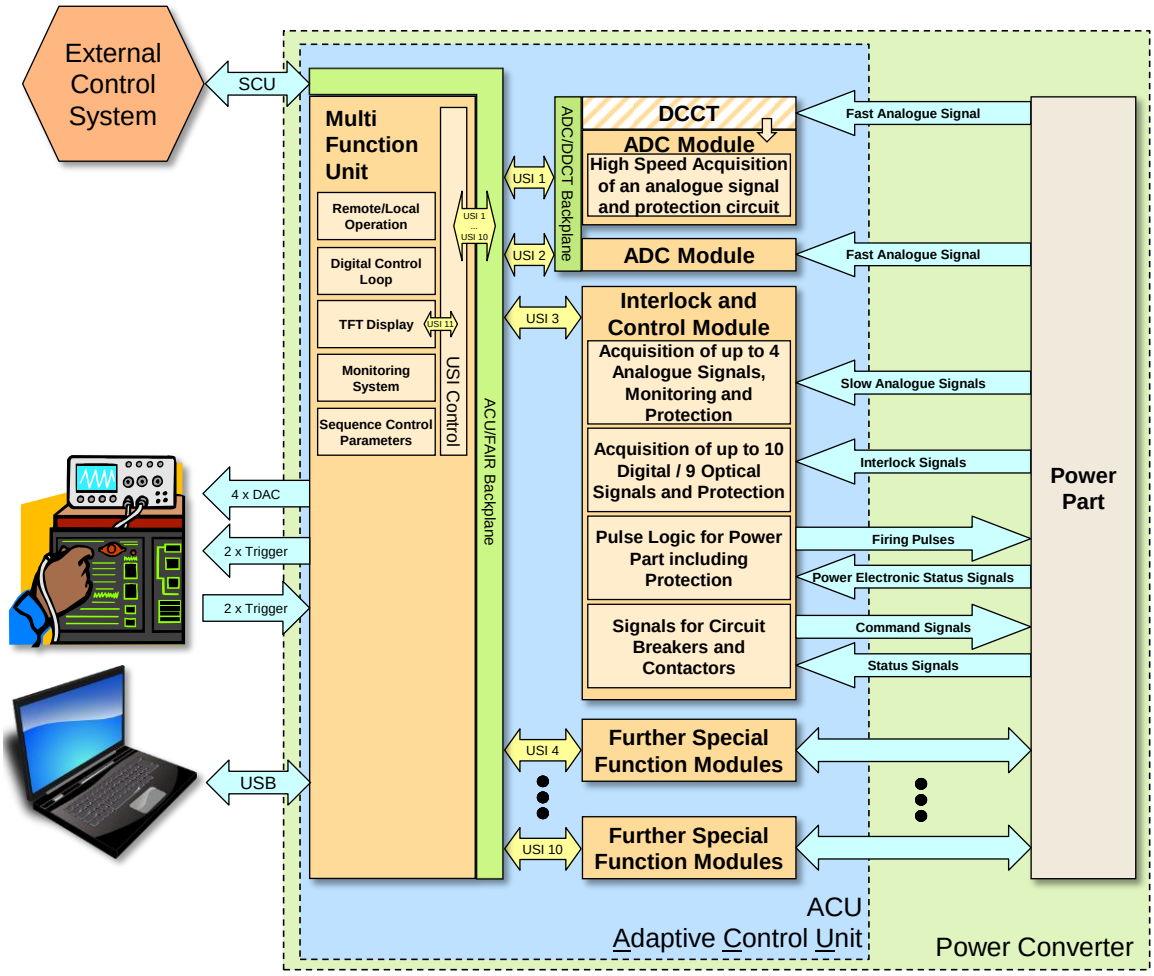

Figure 7 The use of the ACU system in a power converter

The ACU system consists of a set of electronic modules. There are three basic modules:

- **Multifunction module (MFU)** - this unit consists of digital control algorithms and acts as a link to the external control system of FAIR and the user interface for manual operation and measurement purposes.
- **Interlock and Control module** - this module includes the PWM (pulse width modulation) algorithms which produce the firing pulses for the power part. Additionally, this module handles status and interlock signals and slow analog signals for protection purposes. This module needs a supply of 24V DC, 2A, which is in the responsibility of the contractor.
- **ADC module** – this module is used for a high speed acquisition of analogue signals, for example the actual magnet current.

The modules of the ACU system communicate by a serial protocol, the universal serial interface (USI). In the communication scheme the MFU acts as a master

which can supply up to 10 chains of modules from its USI-ports. Each chain can consist of up to 8 cascaded modules. The maximal number of modules which can be cascaded at one USI-port depends of the module bandwidth. The USI hardware provides also a galvanic isolation of the connected modules.

Except for the Interlock And Control Module, which will be placed close to the power part of the power converter, all parts of the ACU system will be mounted inside a 19'' frame (shown in Figure 8). This frame will be equipped with the following parts:

- Backplane 1
- Backplane 2
- Power Supply Module 1
- Power Supply Module 2
- Multifunction Module (MFU)
- First ADC Module for actual value (e.g. current signal)
- Second ADC Module for actual value (e.g. field value or voltage signal, if needed)
- DCCT Card (if needed/ required)

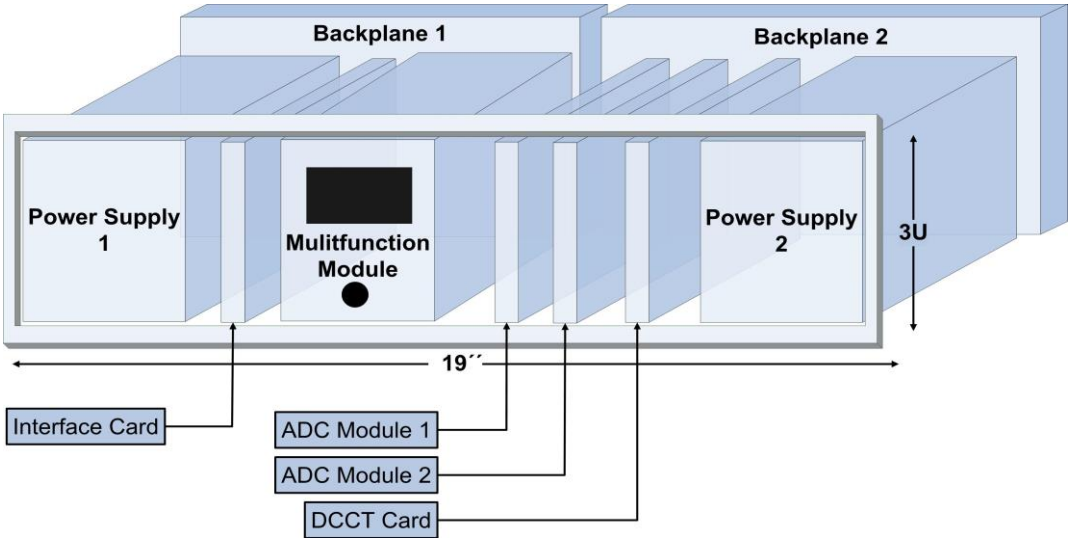

Figure 8 An example of a 19'' frame of a standard ACU system

For cooling purposes, a fan unit (19", 2U) has to be installed beneath the 19" frame of the ACU system (see chapter 8.5.7). This fan unit will be delivered by the Company.

The required firmware to run the modules, as well as the software for the parameterization will be provided by the Company.

The internal PWM of the Interlock And Control Module supports the following hard-switching topologies:

- 1 quadrant (chopper)
- 2 quadrant (half bridge)
- 4 quadrant (full bridge).

Each of the given topologies can have one DC-link[2] or a low voltage DC-link for flat-top operation and a high voltage DC-link for pulsed operation. Figure 9 shows a typical set up of the ACU system inside a switch mode power converter.

12 pulse SCR converters with parallel active filter will be supported by the ACU system, too.

There will also be the possibility to supply power converters of low accuracy requirements with an analogue interface. In this case the MFU contains no control loops but provides the digital set value of the magnet current. In this set up the Interlock and Control module will be replaced by a DAC/ADC control unit, and the power converter control will be analogue (the analogue controller has to be delivered by the contractor).

If a contractor wants to use any power converter topology other than the stated above, there will be no support from the existing ACU system. However, there will be a possibility to use the hardware components of the ACU system with a contractor-specific firmware or contractor-specific hardware modules connected via the USI interface. Therefore, the contractor will have full access to the detailed ACU documentation with training support by the Company.
Nevertheless, in this situation, the contractor will be responsible for the functionality of the power converter including the ACU system, its integration into the power converter and for its parameterisation.

In any case the MFU has to be used in each power converter.

[2] Every DC-link is supplied by a 50Hz transformer and a diode rectifier.

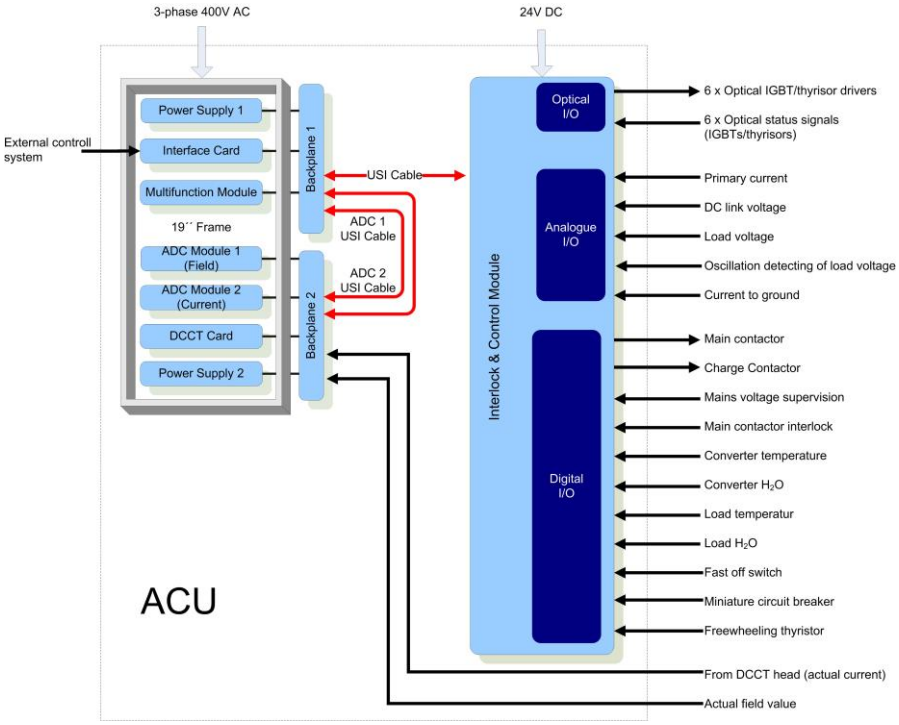

Figure 9 Typical application of the ACU system inside a power converter

More information on the ACU system is given in [9].

8.3.2. Control circuits and Set Values

The ACU provides two independent control loops with proportional and double integral characteristics. These control loops can be cascaded. Therefore, a current loop with a subordinate voltage control loop is possible. The control algorithms used here are based on the analog control strategies enhanced by the possibilities of digital signal processing like limiters and the adaption of control parameters.

The FAIR control system will provide one or two set values:

- set value for the load current. This value is mandatory.
- set value for the load voltage. This value will be provided only, if needed.

The set value of the current signal will have time segments (bending time) which will be described by 2nd or 3rd order polynomials. Hence, the first and second derivative of the 3rd order polynomial will have no discontinuities.
If needed, the set value of the load voltage can be used either directly for the voltage control or in the form of a feed forward signal of the control voltage.

8.3.3. Control panel

A Local/Remote Mode selection switch and three buttons for ON / OFF / RESET are placed on the front panel of the Multifunction Module (MFU). Additionally, the manufacturer of the power converter has to provide a Fast Shut Down Button (on the outer side of the front door) which will act independent of the software.

On the power converter control panel, placed above the ACU frame, few indicating instruments (moving coil/ vane type, app. 50 mm x 50 mm) have to be provided for:

- 400 V supply voltage of the electronics frame U_{L1-L2} and 400V supply voltage of the power part (moving-vane instrument)
- secondary transformer voltage in case of 20 kV supply (moving-vane instrument)
- voltage selector switch for 400 V supply voltage or secondary transformer voltage of power part
- DC link voltage, if available (moving-coil instrument)
- load voltage (moving-coil instrument)
- primary current (moving-vane instrument)
- secondary current in case of 20 kV supply (moving-vane instrument).

On the front panel of the MFU, there is an incremental encoder to apply set values of the DC currents. There are four to-case-isolated DAC-output terminals (LEMO connectors) available showing for example the current measurement (±10V). The graphical TFT-display shows the magnet current and status and fault messages, such as

- Local, Remote
- ON, OFF
- internal and external interlocks.

8.3.4. Installation of ACU system

The connection of the ACU to the electrical supply system must be independent of the power part of the power converter (see chapter 8.5.13). A three-phase disconnector, like miniature circuit breaker or manually operated switch etc., is mandatory. The output fuse of the feeding low voltage distribution is 16A,
All the cables which connect the Interlock and Control module with the power part have to be shielded. The cable shielding has to be grounded very close to the Interlock and Control module on a metal mounting plate. The Interlock and

Control module has to be mounted at an easily accessible location inside the power converter.
For further information see [9].

8.3.5. Interface to the control system of FAIR

An Interface to the control system of FAIR is part of the ACU system and will not be treated by the manufacturer of the power converter.

8.4. Digital DCCT

From the point-of-view of standardisation, it was decided digital DCCTs have to be used in each of the power converter of the FAIR project. The Company will provide the components of the DCCT and the manufacturer of the power converter will have to integrate them.
For all the power converters with a resolution up to 18 bit, a classical analog DCCT system together with an ADC card, mentioned in 8.3.1, can be used. All the power converters which have a demand for 18 or 20 bits will use a DCCT with a direct digital output. The electronics of this DCCT will be situated in a temperature controlled rack close to the power converter. The racks will be provided by the company.

8.5. Design Principles

Beside the definitions in chapter 1.3 of [2], further design principles for the main components and functionalities of a power converter are being described in this chapter.

8.5.1. Over-voltage and voltage transients on the feeding line

- The power part and its components must withstand or must be protected against over-voltage and voltage transients as listed in chapter 2.3 of [2].

8.5.2. Inrush current at turning on

- The inrush current has to be as small as possible, taking into account that, the charging time of the DC-link capacitor should not exceed a limit of 8 s. Also, the inrush current should never exceed the rated input current of the power converter.

8.5.3. Choice of voltage level in the power part

- Under the specified critical load conditions the power converter has to fulfil the criteria of total deviation 8.1.1 taking into account:
  - a 10% under-voltage of the supply system
  - a margin of 5% in the control signal.

8.5.4. Transformers and inductors

- For indoor installation all the transformers and the inductors are to be of dry type. The oil insulated transformers/ inductors are not allowed in this case.
- Transformers and inductors with power rating of >1 kVA should be applied with **insulation class F**, **but** temperature sensors must provide an interlock for temperatures exceeding **120°C**.
- The test voltage for the transformers and inductors with the voltage rating of less than 1 kV is at least 2.5 kV.
- If there are 2 power converters or more than 2 power converters of the same rating and the same type, then there should be 30° of phase shifting between the input transformers of the two halves of the converters. Two power converters with phase shifted transformers, when connected to the same distribution bus bar, behave like a 12-pulse load to the supply system.
- Transformers and inductors have to be designed for a constant load of 110% of nominal current I_n (I_n at nominal supply voltage U_n).
- All the transformers must be equipped with an electrical shield between primary and secondary winding. This shield must be connected through a low-impedance to the ground.

8.5.5. Filter capacitors (DC-link)

- The rated voltage of a capacitor has to be somewhere between 1.1 to 1.25 times the maximum value of the DC-link voltage U_{max} at the over voltage of the supply system.
- The lifetime of a capacitor must be greater than 150, 000 hrs. This has to be achieved by a proper selection of the pulsed current in a capacitor.
- Forced air cooling must be avoided for the capacitors.
- The DC-link capacitor bank shall be discharged to a voltage less than 50 V in less than 30 seconds after a normal turn off, Fast-Shutdown or after the actuation of the door-switch.
- The DC-link capacitor bank and its conductors to switching elements have to be constructed, preferably, of copper plates instead of wires and copper

bars for low impedance. It supports to avoid the excessive transient voltage spikes at semiconductors, an additional EMI and an unbalance of pulsed current in different capacitors in the bank.

8.5.6. Semiconductors

- The rated voltage of a semiconductor must be more than c_D times the maximum voltage $U_{Devicemax}$ which can stress the device. $U_{Devicemax}$ is known by calculation, by measurements or given by the voltage limiting measures like active clamping or other snubber circuits.
  c_D = 1.5 for IGBTs
  c_D = 2.3 for thyristors and diodes
- All the semiconductors have to be designed for a permanent load current of 110% of the nominal load current I_n.
- The current in a single device must not exceed 80% of its rated current values (as mentioned in the data sheet of the device).
- The junction temperature must be less than 80% of the maximum allowed junction temperature (as mentioned in the data sheet of the device).
- All the semiconductors with power losses of more than 200 W have to be water cooled.
- Over temperature of the heat sink of semiconductors must cause an interlock.
- The location of the temperature sensor must be correctly chosen.

8.5.7. Cabinet properties

- The standard size of one cabinet is:
  Width = 0.8m...1.2m
  Depth = 0.8m
  Height = 2.2m
- All electrical connections and water connections are bottom up but with some exceptions as
  1. in case of the interconnecting power cabling of components of a large power converter
  2. in dedicated rooms it is allowed to come top down in case of reduced losses.
- An outlet for the warm air has to be provided at the top of the cabinet. Therefore, the roof of the cabinet has to be lifted up. It is not allowed to have the air outlets at the side of the cabinet.
- If fans for the power part are necessary, it is preferred to mount them on top of the cabinet.
- All necessary fans and air filters must be easily exchangeable.

- All cabinets and housings for power electronics have to be designed for a protection degree of IP22 (exceeds [2]).
- The front panel must be accessible without opening the front door. Therefore the 19'' frame of the ACU system with its fan unit has to be integrated in the front door.
- All the cabinets have front and back doors. Also they are to be interlocked by the door switches, except the front door with the control panel of the ACU system.
- The front door with the control panel of the ACU system must have a *fast shut down* button (chapter 1.2 of [2]).
- All live parts behind the front door with the front panel have to be covered by perspex to avoid life hazard.
- The doors have to be equipped with the locks which can be operated through double-bit keys.
- The noise level of any cabinet or rack must not exceed 60 dBA at any point 1 meter away from it.
- The converters should be vibrations free. Any vibrations, if existing, must be eliminated or damped.
- Cabinets must be constructed for transportation by a hand pallet truck (without using pallets). The access for the hand pallet truck must be possible from each side of the cabinet. Therefore the cabinet must be mounted on supports of 10cm height.
- Cabinet colour shall be RAL 7032 (stove enamel).

8.5.8. Mechanical layout

The mechanical layout depends on the size of the power converter [2]. There are four different layouts:

- **Small power converters**
  Several small power converters can be installed into one standard size cabinet (0.8m x 0.8m x 2.2m).
  There is one electric input for the power parts and a separate electric input for the control electronics and one water input for the water cooling of all the converters within the cabinet. The distribution of electric power and water within the cabinet is in the responsibility of the manufacturer. Care must be taken in the design and arrangements so that the individual maintenance of the converters is feasible and faulty parts are quickly exchangeable.

- **Medium power converters**:
  The power converter consists of one or several adjacent standard size cabinets (0.8…1.2m x 0.8m x 2.2m).

- **Large power converters**
  The transformers of large power converters, which operate directly at the 20kV supply system, are located in separate transformer rooms close to the converter hall (it is possible to place transformers of two large power converters in one transformer room). Usually all other components (inductors, SCRs, IGBTs, capacitors) are mounted in standard size cabinets (0.8..1.2m x 0.8..1m x 2.0..2.2m) in the converter hall. In one front door of these cabinets space has to be foreseen to integrate the ACU frame.
  All interconnecting cabling is part of the power converter.

- **Large power converters in distributed systems**
  This power converter system consists of several power converter groups, which are electrically interconnected but may be placed in different buildings and operate directly at the 20 kV supply system.
  In each relevant building the transformers and the power parts (like inductors, SCRs, DC circuit breakers etc.) are placed in separate dedicated rooms close to the converter hall. In the converter hall the standard size cabinets (0.8m x 0.8m x 2.2m), housing the ACU system and, for example, an active filter, are located. It must be mentioned here that, there is only one ACU system for the distributed converter system.
  All interconnecting cabling within one building is part of the installation of the power converter and in the responsibility of the manufacturer.
  The additional signal cabling between different buildings is part of the converter design. However, laying of the cables is done by the Company according to the cable lists of the manufacturer. Connecting the cables is part of the installation of the converter system and in the responsibility of the manufacturer.

Apart from the individual layout it has to be guaranteed that in case of a fault all the components are easily accessible and replaceable.

Each power converter must have a name plate indicating the following information (see Figure 10):

- CID code (The specification of the 2D barcode can be found in Sec. 2.3 of [8].) The CID number is given by the Company.
- Manufacturer and year of construction
- The cabinet has to be indicated by a cabinet name. The cabinet name has to be derived from the type name of the power converter as given in the corresponding detailed specification followed by a forward slash “/” and a consecutive numbering.

All power converters of the same type, but with different input transformers (see subsec. 8.5.4), must be marked with an additional letter in the cabinet name, indicating the phase shift. The 0°-group must be indicated by A and the 30°-group by B.
For example HB.Q10/1B indicates the first cabinet of type HB.Q10 with an input transformer of 30° phase shifting. HBQ2/3A indicates the third cabinet of type HB.Q2 with an input transformer and no phase shifting.

- Serial number
- Max. output current
- Max. output voltage
- Supply Voltage (for the power part and the control part)
- Effective apparent power (of the power part)
- Required fuse rating of power input (fuse is located in low voltage distribution)
- Max. water flow and differential pressure
- number of wiring diagram
- year of construction

The name plate itself and the printed information must withstand water, oil, light, radiation.

CID: 03-00010002-2	
serial number	XXXX
Name of the company and adress	
Type	HB.Q2/3A
Output current	300 A
Max. output voltage	143 V
Power mains	400 V, 3 ph AC
Control mains	400 V, 3 ph AC
Rated power	26 kVA
Power mains fuse	63 A
Control mains fuse	16 A
Water flow rate	12 l/min, 8bar
Wiring diagram no.	YYYY
Year of construction	2015

Figure 10 Example of name plate with CID

8.5.9. Cooling arrangements

- All the water circuits in a converter are limited to a maximum flow rate of 16 l/min. An additional water circuit has to be implemented, in the case that more 16l/min of water is needed. Each of the water circuits of medium and large power converters has a dedicated water inlet and outlet (stainless steel, dia ¾'').

- Each of these water circuits has to have a flow meter with an electrical output to monitor the water flow. The flow meter has to be mounted at the outlet. The electrical output of the flow meter is a pulse train, and the pulse rate in pulses per second is linearly depended on the flow rate in l/min. The pulses of the flow meter will be handled by the ACU system which provides an interlock in case of a lack of water.

- The water circuits inside a power converter have to be equipped with a valve to exhaust the air during the filling procedures. This valve has to be mounted at the highest point of the water circuit. The water cooling system of the power converter has to be designed to avoid any air- trapping.

- Cooling air for air cooled components can be guided from the bottom to the top of the cabinet. In general the false floor is not air conditioned. Cooling air should be entered in between the supports of the cabinet. Therefore it is not allowed to bridge the gap between the supports by constructive measures.
- Cooling air for high precision control electronics is entered in through an inlet in the front door and is guided specifically to avoid its mixing with the already heated air (the fan unit is provided by the Company, see 8.3.1, 8.5.7).

8.5.10. Interlocks

As described in 8.6, a power converter has to be self-protecting. Therefore, it must be designed to handle a set of interlocks for internal and external faults as listed below. These interlocks are displayed by the ACU system.
It has to be mentioned, that there is no special demand of internal interlocks for the small power converters (see 8.5.13). It is sufficient for such power converters to give a status signal for internal faults to the ACU system.
The interlock list for the medium and large power converters is:

- Load over-current
- DC Filter capacitor over-voltage (for converters with energy recovery)
- Coils over-temperature of transformers and inductors
- Semiconductors heat sink over-temperature
- Primary over-current
- Earth fault
- Fuse fault
- Driver fault
- Water fault of power converter
- Fast Shut Down button (FSD)

- Doors open (when the door is to be kept opened, the door switch can be manually set to a closed position)
- AC Phase fault
- Oscillations in the output voltage
- Fan fault
- Quench protection (In case of super conducting magnets).

Beside the internal interlocks listed before, the following external interlocks will be handled and displayed by the ACU System:

- Load over-temperature
- Load water fault.

In case of super conducting magnets

- Fault in cryogenic supply
- Quench.

Any of these interlocks shall force the converter to the FAULT state. Any other safety interlock, which is considered necessary by the manufacturer, may be added to this list. Further information will be provided in the detailed specifications.
As already defined by the external interlocks, the power converter has to protect the load.
Each normal conducting magnet will have an interlock for the water flow and the temperature. As the ACU is designed to control the water flow rate of the magnet as well, a 12 pin plug (AEGA-114-FR-11-00-0103-200 or AEGA-114-FS-13-00-0103-200) has to be built into the power converter cabinet.
The wiring is described in chapter 5.3.5 of [9].

In case of the super conducting magnets no water flow control is needed. The power converter receives a single optical signal of the external quench detection system to protect the magnet. Details are given in the corresponding detailed specifications.

8.5.11. Beam interlock system

Two different versions of a beam interlock system are described in [4].
The manufacturer of a power converter has to provide all the relays and connectors needed to realize the version defined in the detailed specification of the power converter. The functioning will be handled by the ACU system. Further details are described in [9].

The connector to be used is defined in [4]. It is a 5 pin female connector of type IEC 61076-2-101 circular connector Size M12 with the pin assignment of Figure 12 and Figure 13.

Version A:
In most of the cases version A (see Figure 11), which indicates the status of the power converter to the control system, will be used.
The Interlock and Control module controls a relay with a 24 V signal, which will be switched to 0 V in case of an interlock. At 0V the contacts of the relay are open. Additionally, an auxiliary contact is connected in series with the contact of the relay. The auxiliary contact is opened, when the main contactor of the power converter is open. The principle wiring is shown in Figure 11.

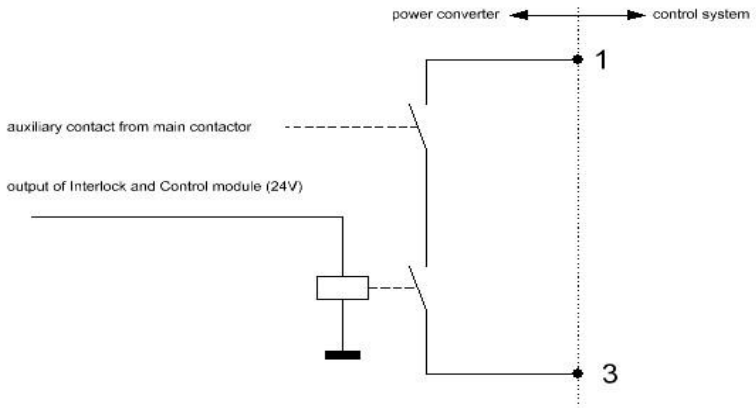

Figure 11 Beam-Interlock System: Version A

Version B:
For some of the dipole power converters version B will be used (see Figure 12). Similar to version A, the status of the power converter is indicated to the control system. In addition, the power converter has to react to the setting of an external contact. An open contact will shut down the power converter. The Interlock and Control module returns the status of the external contact to the control system by a second/ auxiliary contact. This contact must have the same setting as the external contact. The principle wiring is shown in Figure 12.

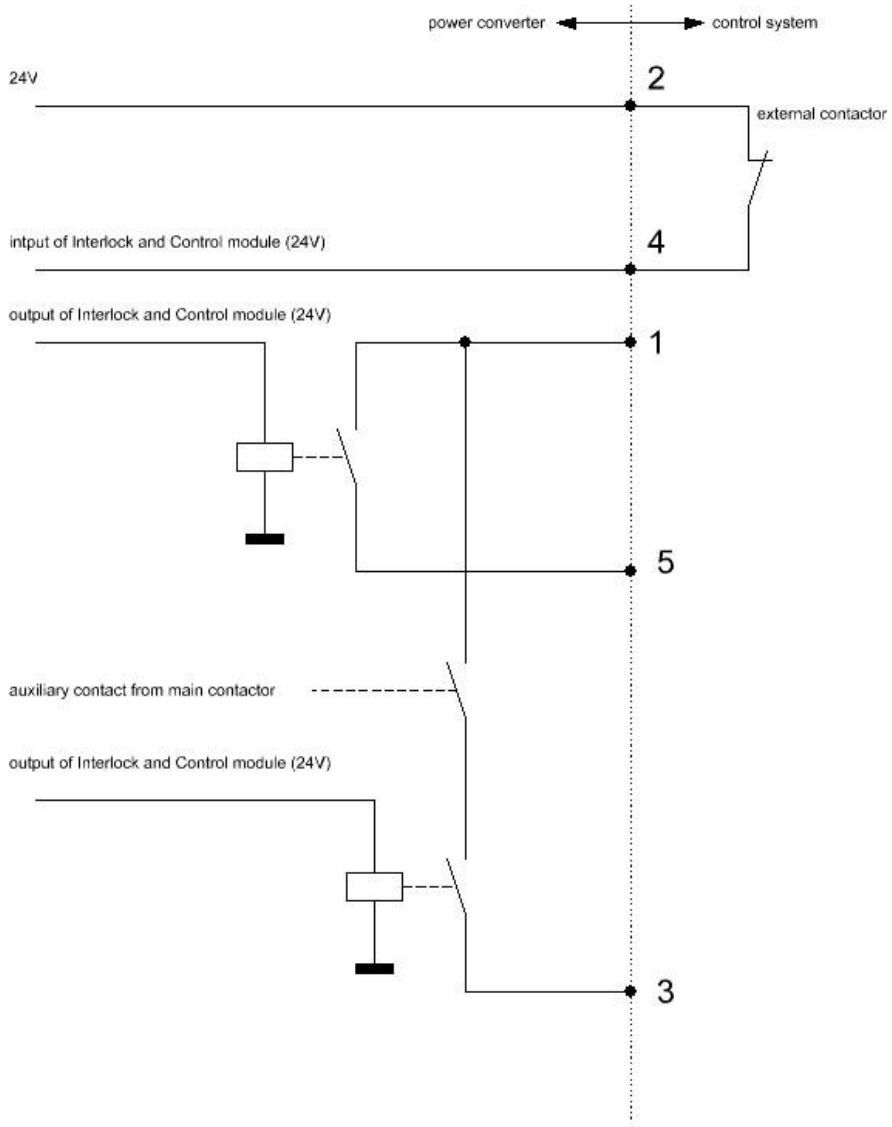

Figure 12 Beam-Interlock System: Version B

8.5.12. Machine Protection system

Dedicated power converters are interacting with the machine protection system. In the detailed specifications of the power converters of concern this feature is listed as a mandatory requirement.
The machine protection system requires a fast optical and electrical output signal of the power converter before any other internal protective action is done, if internal or external interlocks or the violation of the δI-criterion while “Beam is On” would cause the loss of beam. Therefore all internal protective actions of the

power converter are delayed by 50µs. The delay time and all necessary logic is included in the ACU system.
The interface to the machine protection system is an additional electronic board which is supplied by the Company. In the power converter cabinet this board must be mounted in such a way that the fibre optical and electrical signal cables to the machine protection system can be plugged easily to the board.

8.5.13. Connecting power converters to electrical power

Note: Unless otherwise mentioned, all the 3-phase AC voltages are representing their phase-to-phase values, and the single-phase AC voltages are representing their phase-to-neutral values.
Power converters can be connected to the common power systems or to the pulsed power systems (see 5.1.2). The assignment of a power/supply system to a particular power converter depends on the rated power, its working principle and therefore, on the power exchanged with the power grid. Thus a large number of small power converters operating in a synchronized mode can be decided to be connected to the pulsed power systems. The assignment of the power supply will be governed by the Company.

Power converters will be classified in FAIR according to their rated power (S_n):

- small power converters < 10 kVA
- medium power converters 10 kVA < S_n < 500 kVA
- large power converters > 500 kVA

In special cases, the assignment of power converters to a classification can be modified in agreement with the Company.

Small and medium power converters are connected to the 400V three-phase supply system. All the input terminals, switch gears and the transformers are part of the power converters. The type of the supply net is TN-S. A symmetrical load sharing must be assured to avoid any currents in the neutral line.

Large power converters designed for 20 kV have to be delivered along with the transformers, which are integrated parts of the converters. The transformer is to be placed in a nearby transformer box of the building. The converter is connected to the supply system via 20 kV switch gear. This 20 kV switch gear will be supplied by the Company.
Generally, every power converter has two independent supply inputs. One is for the supply of the electronics of the power converter and is connected to the common 400V three phase supply system. The second one connects the power components to the appropriate supply system. The two electrical supply systems are ***not allowed to be coupled*** within/inside the power converter.

8.5.14. Connecting power converters to ground

The cabinets of a power converter are connected to a low impedance grounding system. The output terminals of the power converter have to be symmetrically grounded. The connection to ground has to be done by the resistors along with an earth fault detection device and by the capacitors possessing low ESR. The resistors and the earth fault detection device must allow for an uninterrupted operation even in case of an earth fault (one output terminal is short circuited to ground). If the limit value of the current through the earth fault detection is violated, the power converter has to shut down. The limit value is set in ACU. Excluding the connections for the earth fault detection, the resistance of the power part to ground has to be greater than 50 MΩ.

The shields of all the power cables in the power converter have to be grounded through very low-impedance connections.

8.6. Failures and Reliability

The power converters must not only be self-protecting but they have to protect the load as well.
There are fault detecting and protection devices in the power converters to avoid any damage in case of external/ internal faults.
In particular, the converters shall withstand the following fault situations without suffering any further damage:

- Output short circuit while at full power
- Output short circuit at ON command
- Output open circuit
- Internal faulty components
- Loss of one, two or three AC phases
- Malfunctioning of control system.

All the components must have an individual MTBF greater than 100,000 hrs under the worst case operating conditions described in this specification.

9. Quality Assurance, Tests and Acceptance

Quality assurance, tests and acceptance are specified in the General Specification [1] and in the contracts. Some of the additional points are being specified here.
In general all power converter projects consist of the following phases:

- Concept phase
    - Design concept
    - Creation of manufacturing documents

- Realization of the first unit (prototype)
- Realization of the first series unit (pre-series prototype)
- Series production
- shipping
- Installation & commissioning.

Periodic status reports are mandatory during all the phases. The contractor and the Company have to agree/discuss about the reporting intervals. The deliverables of each phase and the corresponding rights will become the property of the Company.

9.1. Quality Assurance System of the Contractor

An intense document exchange during the concept phase is one of the important means to guarantee that the system fulfills the requirements.

The concept phase is divided into two sections. In the first section (design concept), a set of documents, which is denoted as “conceptual design report” (CDR), have to be delivered by the contractor. A draft version of the CDR must be available at min. 14 days before the acceptance date. The CDR has to include the following information.

- Functional description of all the components
- Explanation of design criteria according to chapter 8.5
- Technical data
- Block diagrams
- Manufacturer/type of all main components
- Description of interface (control interfaces and interfaces to the environment)
- simulation of the operation modes given in the corresponding detailed specification
- test concept to ensure testability during FAT and SAT
- Definition of the critical components which are operated on the verge of or beyond to their specification limits.
- a draft risk analysis (i.e. DIN EN ISO 12100)

A conjoint agreement (between the contractor and the Company) about this CDR has to take place before the manufacturing documents are created.
In the second section of the concept phase (manufacturing documents), a set of documents, which is denoted as “final design report” (FDR), have to be delivered by the contractor.

In addition to the updated CDR, the manufacturing documents have to contain the following information and a draft version must be available at min. 14 days before the acceptance date of FDR:

- A description of the complete power converter
- Mechanical drawings of all main components: Cabinet, transformer, inductor, capacitor bank, arrangement of semiconductors, placement of DCCT-head
- Schematics of the control loops
- Complete schematics of all the electrical circuits
- Detailed specification of all main components
- Complete specification of all the interfaces (electrical, mechanical, building, media, software, etc.)
- Final risk analysis (i.e. DIN EN ISO 12100) with all accompanying documents
- Provision of design and production documents (production plan, quality plans, work instructions and test instructions)
- Test plans and templates of test protocols for FAT and SAT
- adjustment plan if necessary
- List of recommended spare parts
- Transportation specification (dimensions and weights with and without packaging)

In general, the FDR contains all information which allows an immediate production without any further R&D activities.
After the manufacturing documents are available, a formal acceptance of the Company is mandatory before proceeding for the production.

9.2. Factory Acceptance Test (FAT)

The general procedure for test and acceptance is described in the chapters 5.3 to 5.5 of [1]. For power converters chapter 5.3.5 of [1] is to be excluded.
After manufacturing and before delivery, the power converters shall be tested at the factory site. The contractor shall provide the necessary testing equipment and personnel to perform the tests.
A test procedure shall be established for each unit of a series production and a protocol for each unit shall be delivered with the unit, in this case the power converter.
A prototype of each series, called as a pre-series prototype, is to be tested through an extended test procedure, before the series production starts.

9.2.1. FAT of a pre-series power converter

Specific power converter type related tests are described in the detailed specification of the power converter. The ACU system and the graphical user interface on the testing computer support the test procedure.

In general, the pre-series Factory acceptance test on the power converters shall include:

- Test of cooling system with 16 bar
- Verification of the assembly and wiring, according to the technical documentation
- Checking of relevant signals like:
  - Actual load current
  - Actual load voltage
  - DC link voltage
  - Input current
  - Control voltage
  - Gate signals
- Checking the functionality of all the protection and interlock circuits and the resulting actions and reactions
- Testing of Local and Remote operation with full functionality
- Insulation test of the power part (test voltage: 2,5kV)
- Thermal test:
  - A test load may be used to run the converter up to thermal equilibrium under the extreme conditions at maximum possible power. Temperature measurements shall be performed at the semiconductors, inductors and transformers.
  - The power converter has to be operated at 110% of the maximum output current I_n. Temperature measurements shall be performed at the semiconductors, inductors and transformers.
- Functionality test:
  A test load may be used to run the converter under the extreme conditions at maximum possible power and with the maximum cycle frequency or ramp rate (if possible at the maximum output current I_n). The following measurements have to be performed during the test:
  - Measurement of total deviation (only under test load conditions)
  - Measurements of the output voltage ripple
  - Measurements of turn on and turn off behaviour of the semiconductors (i.e. V_{CE} of IGBTs)
  - EMC measurements according to chapter 7.1.2
- All other test that the Company may consider to be important for the final operating conditions of the power converter.

On completion of the tests, the converter will be inspected visually and no damage must be evident. If the tests show that any part of the specification is not met, the contractor must correct the fault and repeat the tests at his own expenses. Tests will have to be repeated, also, if there is any modification during the factory tests. Even if the contractor shall fully test the equipment in the factory, the Company reserves all the rights to repeat any test at the FAIR site.

The Company reserves the right to appoint a representative to witness the factory tests of the equipment. This right shall also apply to any subcontractor. According to the period defined in the contract, the contractor must provide to the Company a proposed schedule for the factory tests, in advance.
The test procedure (including the measuring equipment to be used) has to be documented and provided to the Company.

9.2.2. FAT of power converters of the series

Specific type related tests of power converters are described in the detailed specification of the power converter. The ACU system and the graphical user interface on the testing computer support the test procedure.

In general, the series Factory acceptance test on the power converters shall include:

- Test of cooling system with 16 bar
- of the assembly and wiring, according to the technical documentation
- Verification of the assembly and wiring, according to the technical documentation
- Checking of relevant signals like:
    - Actual load current
    - Actual load voltage
    - DC link voltage
    - Input current
    - Control voltage
    - Gate signals
- Checking the functionality of all the protection and interlock circuits and the resulting actions and reactions
- Testing of Local and Remote operation with full functionality
- Insulation test of the power equipment/ device (test voltage: 2,5kV)
- Functionality test:
  A test load may be used to run the converter under the extreme conditions at maximum possible power and with the maximum cycle frequency or ramp rate (if possible, at the maximum output current I_n). The following measurements have to be performed during the test:
    - Measurement of total deviation (only under test load conditions)

  - Measurements of the output voltage ripple
  - Measurements of turn on and turn off behaviour of the semiconductors (i.e. V_{CE} of IGBTs)
  - EMC measurements according to chapter 7.1.2 , however restricted to voltage measurement at the output terminals and the ac-input terminal L1 to ground
- All other test that the Company may consider important for the final operating conditions of the power converter.

On completion of the tests, the converter will be inspected visually and no damage must be evident. If the tests evident a mismatch to the specification, the contractor must correct the fault and repeat the tests at his own expenses. Tests will also have to be repeated, if there is any modification during the factory tests. Even if the contractor shall fully test the equipment in the factory, the Company reserves all the rights to repeat any test at the FAIR site.

The Company reserves the right to appoint a representative to witness the factory tests of the equipment. This right shall also apply to any subcontractor. According to the period defined in the contract, the contractor must provide to the Company a proposed schedule for the factory tests, in advance.
The test procedure (including the measuring equipment to be used) has to be documented and provided to the Company.

9.3. Site Acceptance Tests (SATs)

The general system for the Site Acceptance Tests, SATs, is described in chapter 5 of [1].
For the power converters, the SAT of type A and Ba are mandatory.
SATs are planned to take place as soon as the facilities are available. The Company requests that the technical expert of the contractor (who has already participated in the manufacturing and factory tests of the power converter) should participate in the SATs at the FAIR site too.
All parts of the test procedure have to be documented and provided to the Company.
In case of any fault, the contractor must correct them immediately on his own expenses at FAIR site. Site acceptance will be granted only after the successful tests and approval of the documents.

9.3.1. SAT A

SAT A is done in two steps Aa and Ab:

- SAT Aa is the incoming good inspection after delivery to the FAIR site. It is to approve/assure that no damage or changes have been occurred during the packing and transportation.
- SAT Ab involves the scouring and passivating of the cooling system of the power converter. This will be done by the contractor including transportation and integration of the power converter in its final installation place. The technical expert from the contractor's side will supervise the integration, scouring and passivation. The equipment for scouring and passivation will be supplied by the Company.

9.3.2. SAT Ba

SAT Ba will be carried out with the real load at the final installation place. The specific power-converter type-related tests are described in the detailed specifications of the power converter. The ACU system and the graphical user interface on the testing computer will support the test procedure.

In general, the site acceptance test on the power converters shall include:

- Checking of relevant signals like:
  - Actual load current
  - Actual load voltage
  - DC link voltage
  - Input current
  - Control voltage
  - Gate signals
- Checking the functionality of all protection and interlock circuits and the resulting actions and reactions.
- Testing of Local and Remote operation with full functionality.
- Control tests. The specified current deviation has to be fulfilled within every specified operation mode.
- Stability test with the real load, to run the converter up to thermal equilibrium under the extreme conditions at maximum power and with the maximum frequency or ramp rate. During the test, total deviation has to be measured at maximum output current I_n.
- EMC measurements according to chapter 7.1.2, however restricted to voltage measurement at the output terminals and the ac-input terminal L1 to ground.
- All the other tests that the Company may consider important for the final operating conditions of the power converter.

10. Transportation

Transportation of the power converters to the FAIR site and also to their final installation places is part of the delivery. Further, technical guidelines on transportation and installation are available: [5], [6] and [7].

11. Documentation

All the required documents have to be provided

1. in both the languages, English and German[3] (optional).
2. As hard/ printed and soft/electronic documents (in Microsoft Word and pdf-formats).

11.1. Documents of the Tendering Process

The following documents have to be delivered during the tendering process:

- Mechanical dimensions and weight of the power converter
- Description of the power converter topology and the working principles
- Diagram of the power part (principle layout)
- Diagram of the control part (principle layout)
- Mechanical drawings of the power converter (alternatively photograph of similar power converters)
- Design data of the main components (transformers, inductors and power electronic components)
- Effective apparent power
- Losses of the main components to water and to air referred to nominal operation mode
- The needed water flow and the needed differential pressure.

11.2. Final Documentation

The final documentation includes:

- service manuals
- final mechanical drawings
- circuit diagrams and schematics of control and power electronics
- list of components
- protocol of factory acceptance test
- protocol of site acceptance test.
- operating Instructions or user manual

[3] Exception: According to 2006/42/EG, the assembly, operation or service manual of the final documentation has to be supplied by the contractor at least in German or preferably in English and German

Additionally, all the circuit diagrams and schematics have to be given in EPLAN Electric P8 format and dxf-file format (except for the printed circuit boards which have to be delivered in dxf-file format and in pdf format). All the schematics and drawings included in other electronic documents must also be given as dxf-file format.

12. Warranty

The warranty period will start at the time when the power converter will successfully pass the final acceptance tests.

I. Related Documentation

[1] General Specifications, F-GS-F-01e-General_Specification

[2] Electrical Design Rules and Regulations F-TG-ET-01e

[3] Supply with cooled water v1.1 F-TG-F-03e

[4] F-TG-C-03e Control-System-Equipment-Interlock-and-Status-Signal-Interface.

[5] F-TG-T-01e Transport

[6] F-TG-T-03e Installation

[7] F-TG-T-02e Existing Infrastructure

[8] F-TG-B-0.5e_CID_and_Barcode

II. Attached Documents

[9] Integration of Adaptive Control Unit (ACU) for Switch Mode Power Converters

[10] Cable_Connection_description

[11] Drawings_Clamping_Coaxial_Cable